High-quality High-performance WON Linear Motion Guide

WONST Linear Motion Guide has a four-row circular face-to-face duplex structure and 4-direction equal load type, which is excellent at bearing high load with high rigidity, auto-adjusting, and compatibility between a rail and a block, and allows smooth and precise operation.

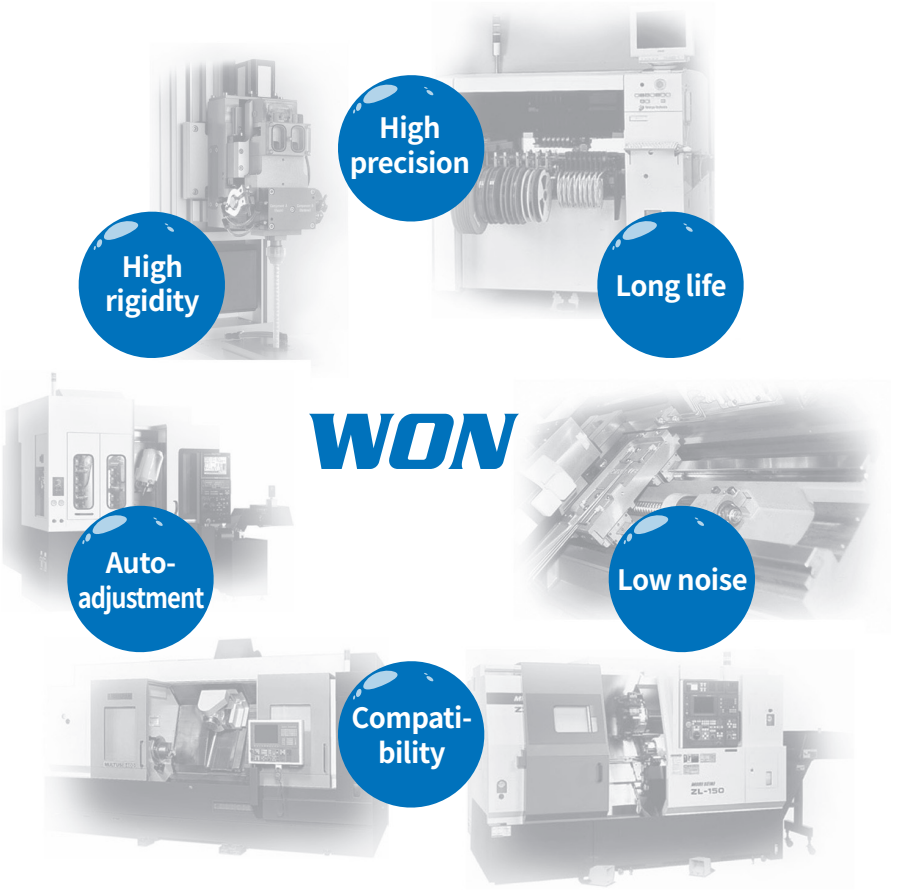

Linear Motion Guide - H series

H-FN

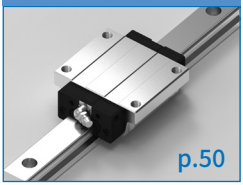

p.50

H-FL

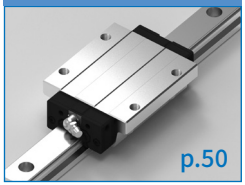

p.50

H-RN

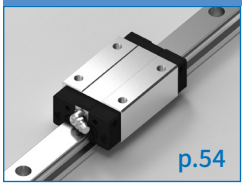

p.54

H-RL

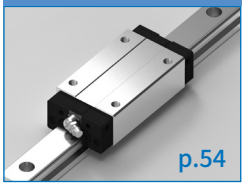

p.54

Spacer Chain Guide - H...S series

H-FN...S

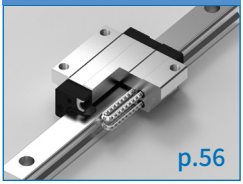

p.56

H-FL...S

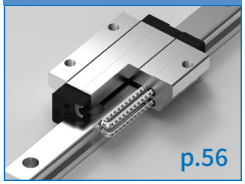

p.56

H-RN...S

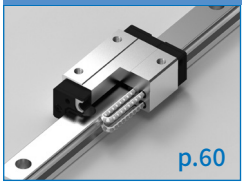

p.60

H-RL...S

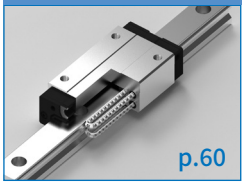

p.60

Wide Linear Motion Guide - HB series

HB-F

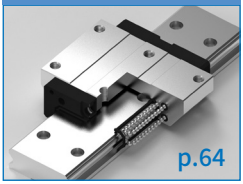

p.64

HB-R

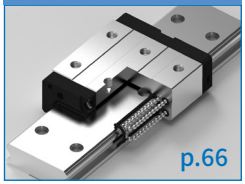

p.66

Slim Linear Motion Guide - S series

S-RC

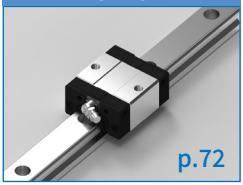

p.72

S-RN

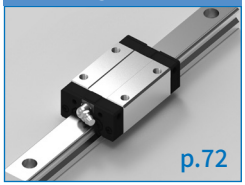

p.72

S-FC

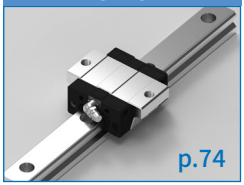

p.74

S-FN

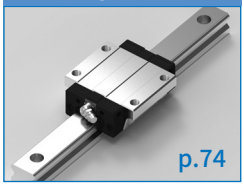

p.74

Slim Spacer Chain Guide - S...S series

S-RC...S

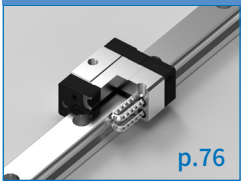

p.76

S-RN...S

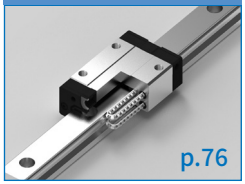

p.76

S-FC...S

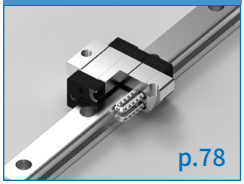

p.78

S-FN...S

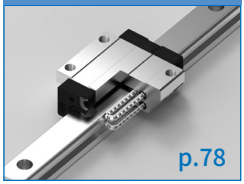

p.78

Slim Linear Motion Guide - HS series

HS-RN

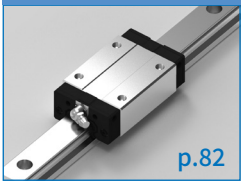

p.82

HS-RL

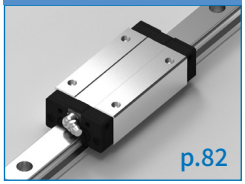

p.82

Slim Spacer Chain Guide - HS...S series

HS-RN...S

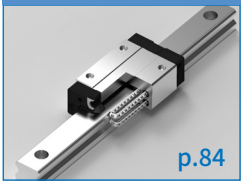

p.84

HS-RL...S

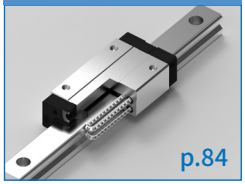

p.84

Miniature Linear Motion Guide - M series

M-C

p.90

M-N

p.90

M-L

p.90

Miniature Wide Linear Motion Guide - MB series

MB-C

p.92

MB-N

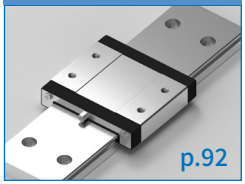

p.92

MB-L

p.92

Roller Linear Motion Roller Guide - R series

R-FN

p.98

R-FL

p.98

R-RN

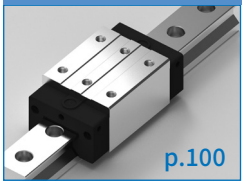

p.100

R-RL

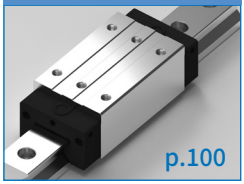

p.100

Slim Roller Linear Motion Roller Guide - RS series

RS-RN

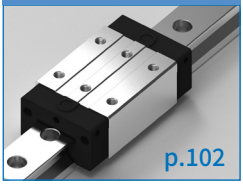

p.102

RS-RL

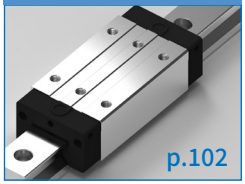

p.102

Crossed Roller Bearing

CB

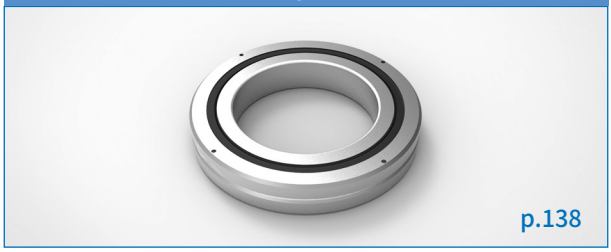

p.138

CH

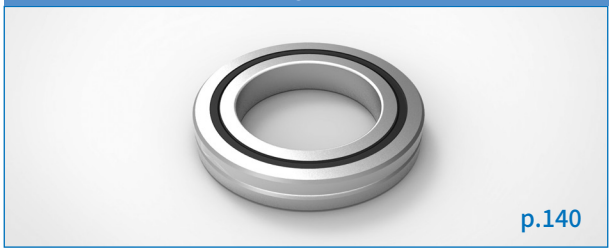

p.140

CA

p.142

Compact Ball Spline

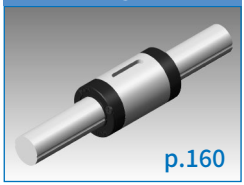
WSP
p.160

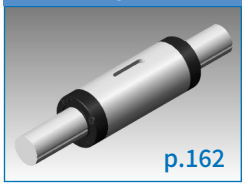
WSPL
p.162

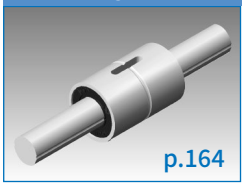
WSPT
p.164

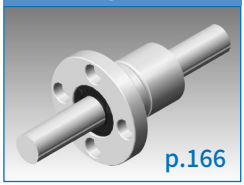
WSPTF
p.166


WSPF
p.168

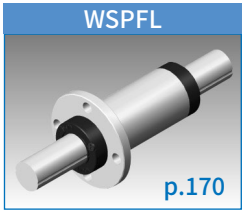
WSPFL
p.170


WSPK
p.172


WSPKL
p.174


WSPTO
p.176

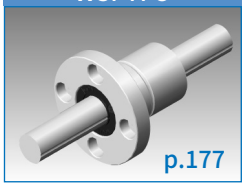
WSPTFO
p.177

Linear Ball Spline

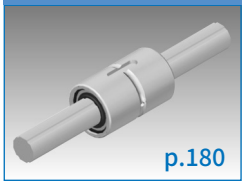
WLS
p.180

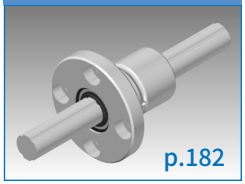
WLSF
p.182

Cross Roller Guide Way

WRG

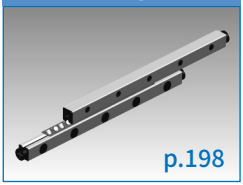

p.198

WRGO

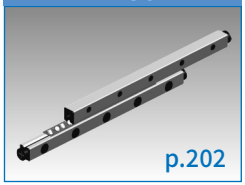

p.202

WRG-AC

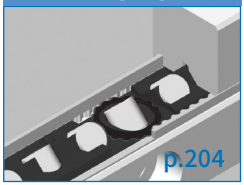

p.204

WRGW

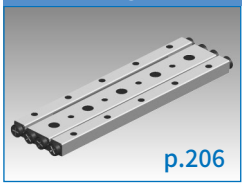

p.206

WRGT

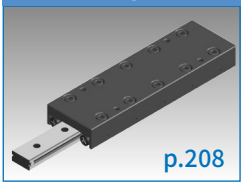

p.208

WRGT-B

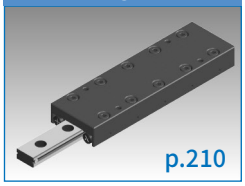

p.210

WRGU

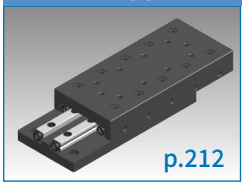

p.212

WRGU-AC

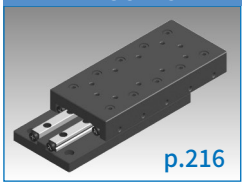

p.216

Cross Roller Guide Way

CRG

p.226

CRGF

p.228

Super Ball Bushing - Asia series

SB

p.240

SBO

p.241

SH

p.242

SHW

p.243

SH-A

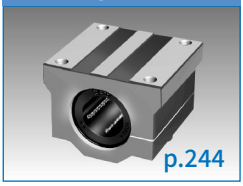

p.244

SHO

p.245

Super Ball Bushing - Europe series

SBE

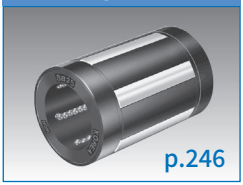

p.246

SBEO

p.247

CS

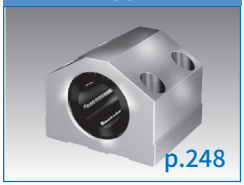

p.248

CS-A

p.249

CSW

p.250

CSW-A

p.251

CSO

p.252

CSO-A

p.253

CSOW

p.254

CSOW-A

p.255

Super Ball Bushing - Inch series

SBA

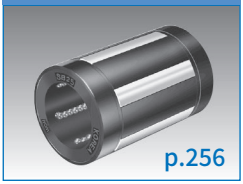

p.256

SBAO

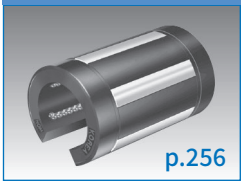

p.256

Linear Ball Bushing - Asia series

LM

p.274

LM□OP

p.274

LM□AJ

p.274

LMF

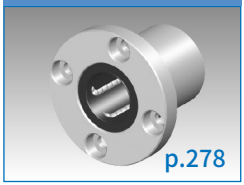

p.278

LMK

p.278

LMH

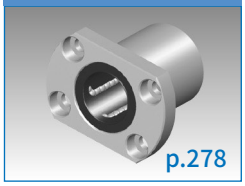

p.278

LMF□L

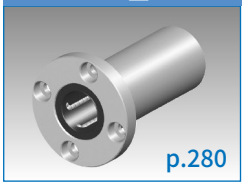

p.280

LMK□L

p.280

LM□L

p.282

SC

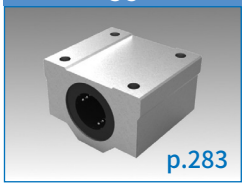

p.283

SCWN

p.284

Linear Ball Bushing - Europe series

LME

p.276

LME□OP

p.276

LME□AJ

p.276

LME□L

p.282

Linear Motion Shaft

Track Roller Guide - outside type

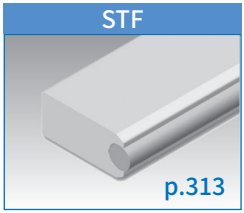
STF
p.313

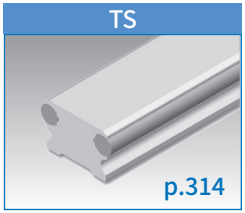
TS
p.314

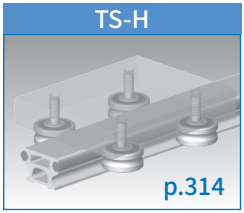
TS-H
p.314

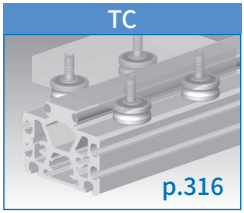
TC
p.316

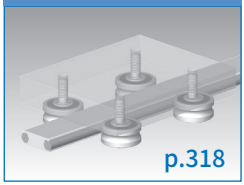
TF
p.318

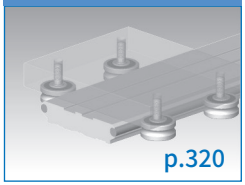
TW
p.320

Track Roller Guide - inside type


TRI
p.322

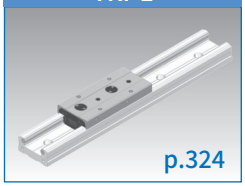
TRI-L
p.324

V Guide


VG20
p.340


VGT20
p.341

WON

LINEAR MOTION SYSTEM

Linear Motion Guide
Contents

Crossed Roller Bearing
Contents

Ball Spline
Contents

Cross Roller Guide Way
Contents

Curved Cross Roller Guide Way
Contents

Super Ball Bushing
Contents

Linear Ball Bushing
Contents

LM Shaft
Contents

T.R Guide
Contents

V Guide
Contents

Appendix
Contents

WON

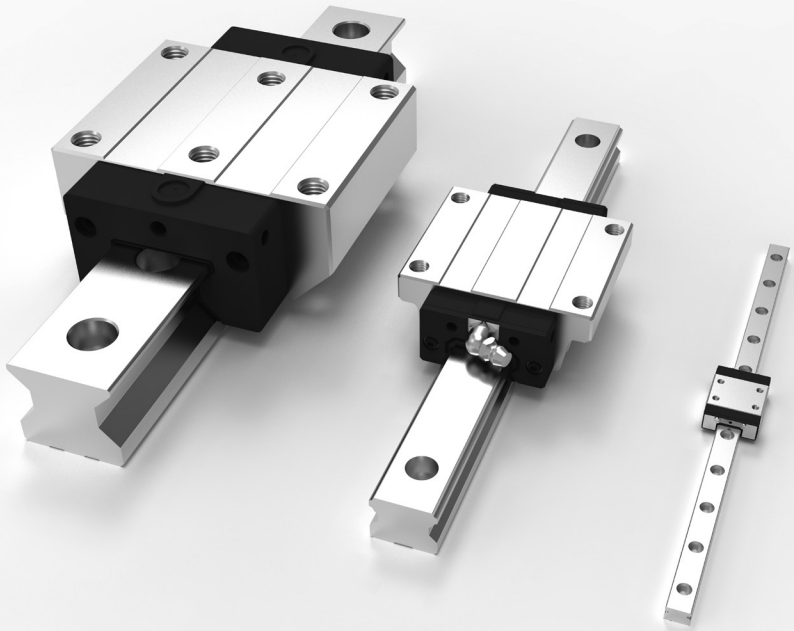

LINEAR MOTION GUIDE

WON

1 WON Linear Motion Guide

1. Features

WON Linear Motion Guide is a linear motion bearing with the structure in which rolling elements such as balls or rollers softly circulate the inner part of a block that can make an infinite linear motion along the raceway surface of a rail.
The device is able to do rolling motion ideally, bearing high load and 4-direction equal load with high rigidity. With its auto-adjusting ability, the linear motion guide is excellent at error-absorbing and improves its precision after assembly. Since it has low frictional force and less abrasion, it is possible to maintain precision long and to drive silently at high-speed running.

2. Strengths

1) Able to make precise positioning

Since there is less difference between static friction and kinetic friction as well as in speed-induced friction fluctuation, it excellently responds even to micro-migration, allowing precise positioning and high-speed running.

2) Able to maintain stable precision for a long time

Less friction coefficient and wear due to ideal rolling motion makes it possible to maintain stable precision for a long time.

3) Able to eliminate clearance or increase rigidity by preloading

It is possible to eliminate clearance by using rolling elements such as a ball or a roller, or to increase rigidity of Linear Motion Guide by preloading.

4) Simple lubrication

Lubrication is simple, and it is convenient to maintain the device with grease or oil.

5) Able to make compact equipment and save the cost for operating electricity

The device is able to bear high load with high rigidity and has low friction. Therefore, it is possible to design compact and miniaturized equipment and to save manufacturing costs and energy.

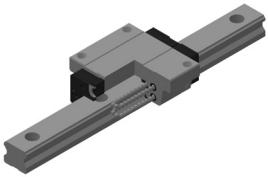
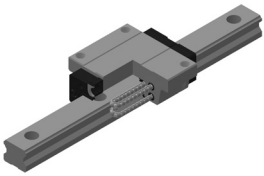
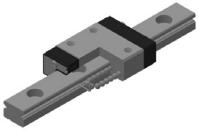
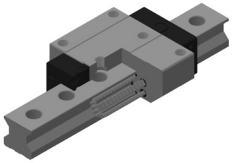

3. Types

WON ST offers various types of linear motion guide from miniature types to general ball linear motion guide to low-noise linear motion guide to ultra-high rigid roller linear motion guide. Since each one supports different shapes and sizes according to service conditions, you can select the optimal linear motion guide suitable for each usage.

Linear Motion Guide	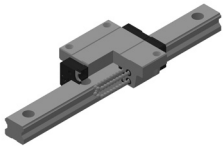	• World standard ball linear motion guide • 4-direction equal load type with 45° contact angle • Great error-absorbing ability with D/F combination • Linear motion with high rigidity and high precision through ideal rolling motion
Wide Linear Motion Guide	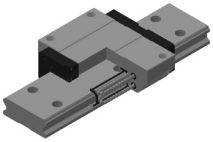	• 4-direction equal load type with 45°contact angle; a low-centered structure with a wide and short rail; the moment working at a narrow space; usable as an one-axis type where high rigidity is required; a de vice with linear motion
Spacer Chain Linear Motion Guide	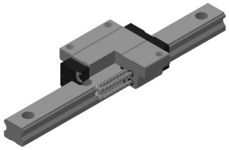	• World standard ball linear motion guide • 4-direction equal load type with 45°contact angle • Great error-absorbing ability with D/F com bination • A spacer ball chain based retainer type; a linear motion device generating low noise and low dust
Miniature Linear Motion Guide	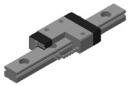	• Miniature high-rigidity • Various shapes and sizes • A compact linear motion device with high durability and reliability
Roller Linear Motion Guide	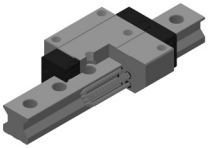	• Roller-enabled ultra-rigid linear motion guide • 4-direction equal load type with 45°contact angle • Able to run reliably for a long time through rolling motion having the wide contact surface • A linear motion device with high rigidity and high precision, and bearing high load

2 Selection of Linear Motion Guide

1. Overview

To select a linear motion guide, it is necessary to identify the details of requirements, prioritize them, and then choose the one that meets the service conditions.

2. Procedure

1 Identify service conditions	equipment, maintenance structure, installation space, assembly status, functional requirements, service conditions
2 Select a type of Linear Motion Guide	Select an appropriate type by considering motion condition, load level, rigidity, friction, and assembly.
3 Select the model number of Linear Motion guide	Determine a model number and a quantity of blocks by considering such factors as assembly space and load.
4 Calculate loads	Calculate the loads of the vertical and horizontal directions and moment, which are imposed on a block.
5 Calculate equivalent load	Convert each load imposed on a block into an equivalent load.
6 Calculate mean load	Convert each load imposed on a block and the variable load during acceleration or deceleration into a mean load
7 Calculate static safety factor	Calculate a static safety factor identified with basic load rating and max. equivalent load. Check if it fits for service conditions.
8 Calculate life	Calculate a rated load and a life span. Check if the calculated life span fits for service conditions.
9 Review preload & clearance	Select the preload and clearance suitable for service conditions.
10 Determine the class of precision	Determine a class of driving precision required by Linear Motion guide
11 Lubrication, dust proof, surface handling	Select the lubricant suitable for the environment using grease, oil, or special grease lubrication. Select a dustproof seal. Determine the surface treatment for rust prevention for generating low dust.
12 Complete selection	Decide the final specifications of Linear Motion guide.

3 Life Calculation

1. Load rating and life

1) Life

If external load is applied to linear motion guide in driving, fatigue fracture occurs due to the stress made as load is repeatedly applied to the raceway surface and rolling elements, and peeling off scale-like flakes (flaking) arises. Life of a linear motion guide refers to a total driving distance until the point that flaking arises due to initial fatigue fracture.

- A linear motion guide can have defects earlier than the time of normal flaking caused by its wear or fatigue in the following cases:

a. Excess load by the imprecise assembly following a difference in temperature or tolerance
b. If a linear motion guide is contaminated with foreign substances
c. Driving with insufficient lubrication
d. Reciprocating motion in a very short distance in the form of vibration or wave during halting or driving
e. Excessive load imposed on a linear motion guide
f. Deformation of plastic end-plate

2) Rating fatigue life L

Generally linear motion guide does not always have an equal life span even though its products are manufactured in the same way, because of the difference in scattering of original fatigue of raw-material. For this reason, the reference value of life of a linear motion guide is defined as the rating fatigue life which is a total driving distance that 90% of linear motion guides in one group with the same specifications can reach without flaking at the time when all in the group run under the same conditions.

When using a ball

$$L = \left(\frac{f_H \cdot f_T \cdot f_C}{f_W} \cdot \frac{C}{P_C} \right)^3 \times 50$$

When using a roller

$$L = \left(\frac{f_H \cdot f_T \cdot f_C}{f_W} \cdot \frac{C}{P_C} \right)^{\frac{10}{3}} \times 100$$

3) Basic dynamic load rating C

Basic dynamic load rating is a ability of linear motion guide to bear load, which represents an appli cable constant load in direction and magnitude when the rated fatigue life is 50Km. The reference value of basic of WON linear motion guide dynamic load rating is 50Km (ball type) and 100Km (roller type), respectively. It is used for calculating of life a linear motion guide while driving under constant load in magnitude from the center of a block to bottom. Each value of basic dynamic load rating (C) is described in the catalogue

4) Basic static load rating C_0

If a linear motion guide is applied by excessive load or instantly by big impact load, partially perma nent deformation occurs between a rolling element and the raceway surface. If deformation reaches to a certain extent, it hinders smooth driving.
Basic static load rating is defined as the constant static load in direction and magnitude when the total permanent deformation of the raceway surface of block and rail and of a rolling element like a ball or a roller is 0.0001 times bigger than the diameter of the rolling element. In a linear motion guide, it refers to the load applied from top to bottom based on the center of a block.
Each value of basic static load rating (C_0) is described in the specification table.

5) Static allowable moment M_0

Moment load can be imposed on a linear motion guide. At this time, a ball or a roller both at the ends is most stressed due to the stress distribution of a ball or a roller as a rolling element in the linear motion guide. Static allowable moment (M_0) refers to the constant moment load in direction and magnitude when the total permanent deformation of a ball or roller, a rolling element to which the biggest stress is applied, and of the raceway surface of a block or rail is less than 0.0001 of the diameter of the rolling element. Moment values of three directions (Mp, My, Mr) are described in the catalogue. Static allowable moment (M_0) and static moment load rating (Mp) can be reviewed with application of safety factor (fs)

Directions of load and moment

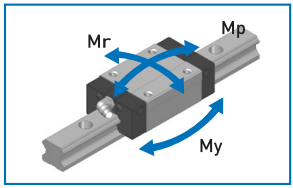

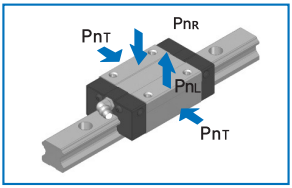

$$f_s = \frac{M_p}{M_0}$$

2. Load calculation

A linear motion guide bears basic dynamic load rating (C) and basic static load rating (C_0). Neverthe less, it also needs to bear compression load applied from top to down due to inertia force created by the center of gravity, positioning thrust, acceleration, cutting force, and deceleration as well as various loads including tensile load, horizontal load, and moment load, depending on the service conditions. In this case, load of the linear motion guide changes. To select a linear motion guide, it is required to review these conditions and calculate a proper load.

3. Service condition setting

Service conditions necessary for calculating the load and life of a linear motion guide.

① Mass : m(kg)
② Applicable load direction :
③ Point of application : ℓ_2, ℓ_3, h_1(mm)
(center of gravity)
④ Point of thrust : ℓ_4, h_2(mm)
⑤ Composition of linear motion guide : ℓ_0, ℓ_1(mm)
(No. of blocks & rails)
⑥ Velocity diagram Velocity : V(mm/s)
Time constant : tn(s)
Acceleration : α_n(mm/s^2)
⑦ No. of reciprocating motions per minute : N_1(min^{-1})
⑧ Stroke : Ls(mm)
⑨ Avg. velocity : Vm(m/s)
⑩ Required life : Lh(h)

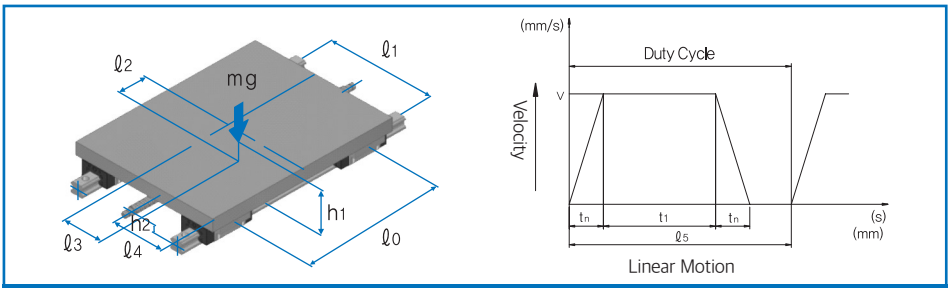

Figure 1. Service Condition

4. Load calculation formula

The load applied to a linear motion guide changes depending on external forces such as the center of gravity, position of thrust, acceleration, and cutting resistance. To select a linear motion guide, it is required to calculate the load applied to a block in full consideration of the conditions shown below.

m	: Mass	(kg)	g	: Acceleration of gravity (g : 9.8m/s²)	(m/s²)
ℓ_n	: Mass	(mm)	V	: Velocity	(m/s)
F_n	: Thrust	(N)	t_n	: Time constant	(s)
P_n	: Load (vertical, reverse-vertical)	(N)	α_n	: Velocity	(m/s²)
P_{nT}	: Load (horizontal)	(N)			

Case	Service Conditions	Load Calculation Formula
1	Block move Horizontal / uniform motion / stationary 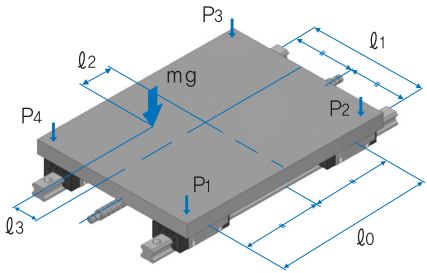 	$P_1 = \frac{mg}{4} + \frac{mg \cdot \ell_2}{2 \cdot \ell_0} - \frac{mg \cdot \ell_3}{2 \cdot \ell_1}$ $P_2 = \frac{mg}{4} - \frac{mg \cdot \ell_2}{2 \cdot \ell_0} - \frac{mg \cdot \ell_3}{2 \cdot \ell_1}$ $P_3 = \frac{mg}{4} - \frac{mg \cdot \ell_2}{2 \cdot \ell_0} + \frac{mg \cdot \ell_3}{2 \cdot \ell_1}$ $P_4 = \frac{mg}{4} + \frac{mg \cdot \ell_2}{2 \cdot \ell_0} + \frac{mg \cdot \ell_3}{2 \cdot \ell_1}$
2	Block move Overhang-Horizontal / uniform motion / stationary 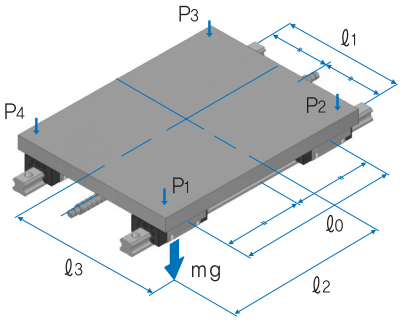 	$P_1 = \frac{mg}{4} + \frac{mg \cdot \ell_2}{2 \cdot \ell_0} + \frac{mg \cdot \ell_3}{2 \cdot \ell_1}$ $P_2 = \frac{mg}{4} - \frac{mg \cdot \ell_2}{2 \cdot \ell_0} + \frac{mg \cdot \ell_3}{2 \cdot \ell_1}$ $P_3 = \frac{mg}{4} - \frac{mg \cdot \ell_2}{2 \cdot \ell_0} - \frac{mg \cdot \ell_3}{2 \cdot \ell_1}$ $P_4 = \frac{mg}{4} + \frac{mg \cdot \ell_2}{2 \cdot \ell_0} - \frac{mg \cdot \ell_3}{2 \cdot \ell_1}$

Case	Service Conditions	Load Calculation Formula
3	Rail move Horizontal / uniform motion / stationary 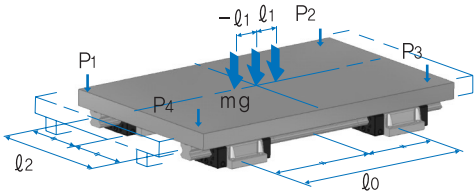 E.g.) X or Z axis Loader / unLoader	$P_1 = \frac{mg \cdot \cos\theta}{4} + \frac{mg \cdot \cos\theta \cdot \ell_2}{2 \cdot \ell_0} - \frac{mg \cdot \cos\theta \cdot \ell_3}{2 \cdot \ell_1} + \frac{mg \cdot \sin\theta \cdot h_1}{2 \cdot \ell_1}$ $P_{1T} = \frac{mg \cdot \sin\theta}{4} + \frac{mg \cdot \sin\theta \cdot \ell_2}{2 \cdot \ell_0}$ $P_2 = \frac{mg \cdot \cos\theta}{4} - \frac{mg \cdot \cos\theta \cdot \ell_2}{2 \cdot \ell_0} - \frac{mg \cdot \cos\theta \cdot \ell_2}{2 \cdot \ell_1} + \frac{mg \cdot \sin\theta \cdot h_1}{2 \cdot \ell_1}$ $P_{2T} = \frac{mg \cdot \sin\theta}{4} - \frac{mg \cdot \sin\theta \cdot \ell_2}{2 \cdot \ell_0}$
4	Block move Wall installation / uniform motion / stationary 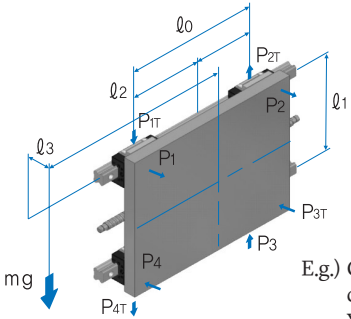 E.g.) Gantry-type device Y-axis drive	$P_1 \sim P_4 = \frac{mg \cdot \ell_3}{2 \cdot \ell_1}$ $P_{1T} = P_{4T} = \frac{mg}{4} + \frac{mg \cdot \ell_2}{2 \cdot \ell_0}$ $P_{2T} = P_{3T} = \frac{mg}{4} - \frac{mg \cdot \ell_2}{2 \cdot \ell_0}$
5	Block move Vertical / uniform motion / stationary 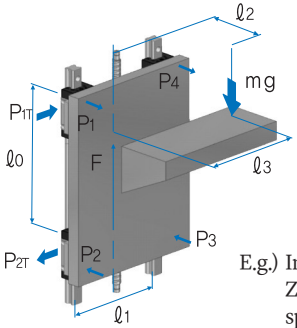 E.g.) Industrial robot, Z-axis, Auto-painting spray, Lifter	$P_1 \sim P_4 = \frac{mg \cdot \ell_2}{2 \cdot \ell_0}$ $P_{1T} \sim P_{4T} = \frac{mg \cdot \ell_3}{2 \cdot \ell_0}$

Case	Service Conditions	Load Calculation Formula
6	Block move Vertical/moment of inertia 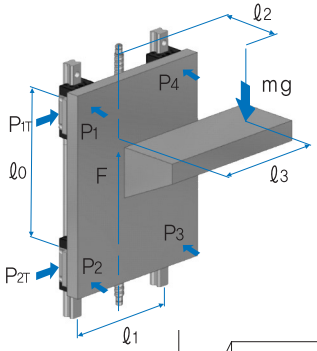 $\alpha n = \frac{V}{tn}$ 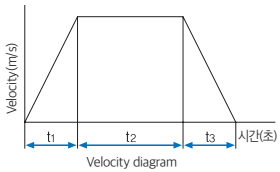 E.g.) Conveyance robot, LTR robot 2-axis	Acceleration $P_1 = P_4 = -\frac{m(g-\alpha_1)\ell_2}{2 \cdot \ell_0}$ $P_2 = P_3 = \frac{m(g-\alpha_1)\ell_2}{2 \cdot \ell_0}$ $P_{1T} = P_{4T} = \frac{m(g-\alpha_1)\ell_3}{2 \cdot \ell_0}$ $P_{2T} = P_{3T} = -\frac{m(g-\alpha_1)\ell_3}{2 \cdot \ell_0}$ Constant Velocity $P_1 = P_4 = -\frac{mg \cdot \ell_2}{2 \cdot \ell_0}$ $P_2 = P_3 = \frac{mg \cdot \ell_2}{2 \cdot \ell_0}$ $P_{1T} = P_{4T} = \frac{mg \cdot \ell_3}{2 \cdot \ell_0}$ $P_{2T} = P_{3T} = -\frac{mg \cdot \ell_3}{2 \cdot \ell_0}$ Deceleration $P_1 = P_4 = -\frac{m(g-\alpha_3)\ell_2}{2 \cdot \ell_0}$ $P_2 = P_3 = \frac{m(g-\alpha_3)\ell_2}{2 \cdot \ell_0}$ $P_{1T} = P_{4T} = \frac{m(g-\alpha_3)\ell_3}{2 \cdot \ell_0}$ $P_{2T} = P_{3T} = -\frac{m(g-\alpha_3)\ell_3}{2 \cdot \ell_0}$
7	Block move Complex external loads like cutting load 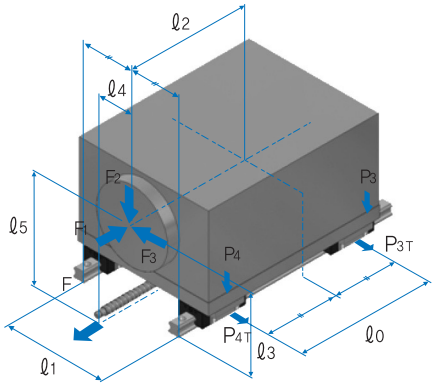 E.g.) Machine tool, CNC lathe, Machining center, NC milling machine	F1 application $P_1 = P_4 = -\frac{F_1 \cdot \ell_5}{2 \cdot \ell_0}$ $P_2 = P_3 = \frac{F_1 \cdot \ell_5}{2 \cdot \ell_0}$ $P_{1T} = P_{4T} = \frac{F_1 \cdot \ell_4}{2 \cdot \ell_0}$ $P_{2T} = P_{3T} = -\frac{F_1 \cdot \ell_4}{2 \cdot \ell_0}$ F2 application $P_1 = P_4 = \frac{F_2}{4^+} \quad \frac{F_2 \cdot \ell_2}{2 \cdot \ell_0}$ $P_2 = P_3 = \frac{F_2}{4^-} \quad \frac{F_2 \cdot \ell_2}{2 \cdot \ell_0}$ F3 application $P_1 = P_4 = -\frac{F_3 \cdot \ell_3}{2 \cdot \ell_1}$ $P_2 = P_3 = \frac{F_3 \cdot \ell_3}{2 \cdot \ell_1}$ $P_{1T} = P_{4T} = \frac{F_3}{4^-} \quad \frac{F_3 \cdot \ell_2}{2 \cdot \ell_0}$ $P_{2T} = P_{3T} = \frac{F_2}{4^-} \quad \frac{F_3 \cdot \ell_2}{2 \cdot \ell_0}$

Case	Service Conditions	Load Calculation Formula
8	Block move Moment load in case of application to side slope / cutting load 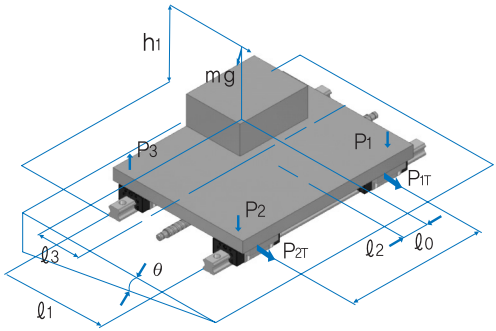 	$P_1 = \frac{mg \cdot \cos\theta}{4} + \frac{mg \cdot \cos\theta \cdot \ell_2}{2 \cdot \ell_0} - \frac{mg \cdot \cos\theta \cdot \ell_3}{2 \cdot \ell_1} + \frac{mg \cdot \sin\theta \cdot h_1}{2 \cdot \ell_1}$ $P_{1T} = \frac{mg \cdot \sin\theta}{4} + \frac{mg \cdot \sin\theta \cdot \ell_2}{2 \cdot \ell_0}$ $P_2 = \frac{mg \cdot \cos\theta}{4} - \frac{mg \cdot \cos\theta \cdot \ell_2}{2 \cdot \ell_0} - \frac{mg \cdot \cos\theta \cdot \ell_2}{2 \cdot \ell_1} + \frac{mg \cdot \sin\theta \cdot h_1}{2 \cdot \ell_1}$ $P_{2T} = \frac{mg \cdot \sin\theta}{4} - \frac{mg \cdot \sin\theta \cdot \ell_2}{2 \cdot \ell_0}$ $P_3 = \frac{mg \cdot \cos\theta}{4} - \frac{mg \cdot \cos\theta \cdot \ell_2}{2 \cdot \ell_0} + \frac{mg \cdot \cos\theta \cdot \ell_3}{2 \cdot \ell_1} - \frac{mg \cdot \sin\theta \cdot h_1}{2 \cdot \ell_1}$ $P_{3T} = \frac{mg \cdot \sin\theta}{4} + \frac{mg \cdot \sin\theta \cdot \ell_2}{2 \cdot \ell_0}$ $P_4 = \frac{mg \cdot \cos\theta}{4} + \frac{mg \cdot \cos\theta \cdot \ell_2}{2 \cdot \ell_0} + \frac{mg \cdot \cos\theta \cdot \ell_3}{2 \cdot \ell_1} - \frac{mg \cdot \sin\theta \cdot h_1}{2 \cdot \ell_1}$ $P_{4T} = \frac{mg \cdot \sin\theta}{4} + \frac{mg \cdot \sin\theta \cdot \ell_2}{2 \cdot \ell_0}$
9	Block move Moment load in case of application to side slope / cutting load 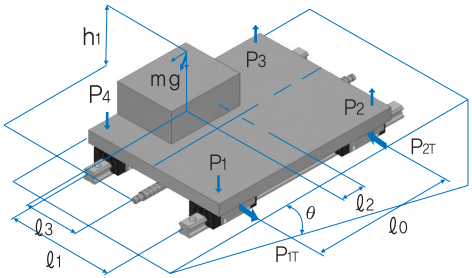 E.g.) CNC lathe, Tool rest	$P_1 = \frac{mg \cdot \cos\theta}{4} + \frac{mg \cdot \cos\theta \cdot \ell_2}{2 \cdot \ell_0} - \frac{mg \cdot \cos\theta \cdot \ell_3}{2 \cdot \ell_1} + \frac{mg \cdot \sin\theta \cdot h_1}{2 \cdot \ell_0}$ $P_{1T} = \frac{mg \cdot \sin\theta \cdot \ell_3}{2 \cdot \ell_0}$ $P_2 = \frac{mg \cdot \cos\theta}{4} - \frac{mg \cdot \cos\theta \cdot \ell_2}{2 \cdot \ell_0} - \frac{mg \cdot \cos\theta \cdot \ell_3}{2 \cdot \ell_1} - \frac{mg \cdot \sin\theta \cdot h_1}{2 \cdot \ell_0}$ $P_{2T} = -\frac{mg \cdot \sin\theta \cdot \ell_3}{2 \cdot \ell_0}$ $P_3 = \frac{mg \cdot \cos\theta}{4} - \frac{mg \cdot \cos\theta \cdot \ell_2}{2 \cdot \ell_0} + \frac{mg \cdot \cos\theta \cdot \ell_3}{2 \cdot \ell_1} - \frac{mg \cdot \sin\theta \cdot h_1}{2 \cdot \ell_0}$ $P_{3T} = -\frac{mg \cdot \sin\theta \cdot \ell_3}{2 \cdot \ell_0}$ $P_4 = \frac{mg \cdot \cos\theta}{4} + \frac{mg \cdot \cos\theta \cdot \ell_2}{2 \cdot \ell_0} + \frac{mg \cdot \cos\theta \cdot \ell_3}{2 \cdot \ell_1} + \frac{mg \cdot \sin\theta \cdot h_1}{2 \cdot \ell_0}$ $P_{4T} = \frac{mg \cdot \sin\theta \cdot \ell_3}{2 \cdot \ell_0}$

Case	Service Conditions	Load Calculation Formula
10	Block move Horizontal application / Inertia force application 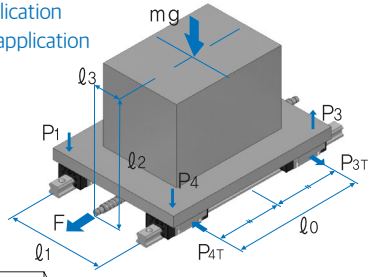 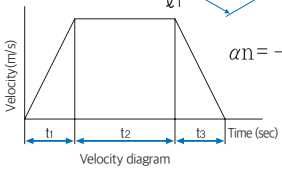 Velocity diagram $\alpha n = \frac{V}{tn}$ E.g.) Industrial robot carriage, LCD test device	Acceleration $P_1=P_4=\frac{mg}{4}-\frac{m\cdot\alpha_1\cdot\ell_2}{2\cdot\ell_0}$ $P_2=P_3=\frac{mg}{4}+\frac{m\cdot\alpha_1\cdot\ell_2}{2\cdot\ell_0}$ $P_{1T}\sim P_{4T}=\frac{m\cdot\alpha_1\cdot\ell_3}{2\cdot\ell_0}$ Constant velocity $P_1\sim P_4=\frac{mg}{4}$ Deceleration $P_1=P_4=\frac{mg}{4}+\frac{m\cdot\alpha_3\cdot\ell_2}{2\cdot\ell_0}$ $P_2=P_3=\frac{mg}{4}-\frac{m\cdot\alpha_3\cdot\ell_2}{2\cdot\ell_0}$ $P_{1T}\sim P_{4T}=\frac{m\cdot\alpha_3\cdot\ell_3}{2\cdot\ell_0}$

5. Equivalent load calculation

There are diverse kinds of load imposed on a block in a linear motion guide, such as compression load in vertical direction, tensile load, horizontal load, and moment load. There is also complex load of them. Sometimes the magnitude and direction of load change. Since it is difficult to calculate the variable load when calculating the life of the linear motion guide, it is required to use the equivalent load converted into the compression load or tensile load in vertical direction in order to calculate the life or static safety factor.

6. Equivalent load calculation formula

If a linear motion guide bears vertical compression load or tensile load or horizontal load simul taneously, or if the magnitude or direction of load changes, an equivalent load is calculated in the following formula.

P_E(Equivalent load) = P_n+ P_{nT}

P_n : Compression load
P_{nT} : Horizontal load

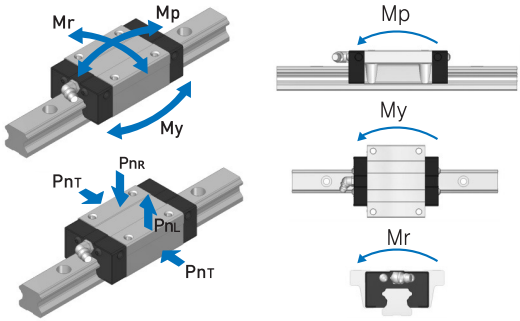

P_n : Compression load
P_L : Tensile load
P_{nT} : Horizontal load
M_p : Pitching moment
M_y : Yawing moment
M_r : Rolling moment

Figure 2.

7. Static safety factor calculation

Any unexpected big load may be applied to a linear motion guide due to the inertia force caused by vibration impact or quick braking and moment load of mechanical structure. To select a linear motion guide, it is required to take into account static safety factor and prepare for such load. Static safety factor (fs) is the value obtained by dividing basic static load rating by the calculated load. To see the baseline of static safety factor by service condition, please see Table 1-1 and Table 1-2.

Table 1-1. Baseline of static safety factor(fs)

Type of rolling element	Service condition	Static safety factor (fs)
Ball	There are no vibration and impacts.	1.0 ~ 1.5
	High driving performance is needed.	1.5 ~ 2.0
	There are moment load, violation, and impacts.	2.5 ~ 7.0
Roller	There are no vibration and impacts.	2.0 ~ 3.0
	High driving performance is needed.	3.0 ~ 5.0
	There are moment load, violation, and impacts.	4.0 ~ 7.0

Table 1-2.

If compression load is big	$\frac{f_H \cdot f_T \cdot f_C \cdot C_0}{P_n} \geqq f_S$
If tensile load is big	$\frac{f_H \cdot f_T \cdot f_C \cdot C_0}{P_L} \geqq f_S$
If horizontal load is big	$\frac{f_H \cdot f_T \cdot f_C \cdot C_0}{P_{nT}} \geqq f_S$

f_S : Static safety factor

C_0 : Basic static load rating(vertical) (N)

P_n : Calculated load (vertical) (N)

P_L : Calculated load (reverse-vertical) (N)

P_{nT} : Calculated load (horizontal) (N)

f_H : Hardness factor

f_T : Temperature factor

f_C : Contact factor

8. Mean load calculation

The load applied to a block of a linear motion guide is not constant but differs according to service conditions. Therefore, the load that becomes equal to life under the condition of variable load is used. This is called mean load. If the load applied to the block is changed due to an external condi tion, it is required to calculate a life with the mean load in consideration of the various conditions shown below. If load applied to block varies in different conditions, it is necessary to a life in consid eration of the condition of variable load. Mean load (Pm) refers to constant load that becomes equal to the life under the conditions of variable load when the load applied to a block changes in various conditions while the device is driving.

$$P_m = \sqrt[i]{\frac{1}{L} \cdot \sum_{n=1}^{n} (P_n{}^i \cdot L_n)}$$

Pm	: Mean load	(N)
Pn	: Variable load	(N)
L	: Total travel distance	(mm)
Ln	: Travel distance by loading Pn	(mm)
i	: Ball - 3, Roller - 10/3	

Note) the formula above or formula (1) below is applied to a ball type only.

1) Change in phase

$$P_m = \sqrt[3]{\frac{1}{L}(P_1{}^3 \cdot L_1 + P_2{}^3 \cdot L_2 \cdots\cdots + P_n{}^3 \cdot L_n)} \cdots\cdots (1)$$

Pm	: Mean load	(N)
Pn	: Variable load	(N)
L	: Total travel distance	(mm)
Ln	: Travel distance by loading Pn	(mm)

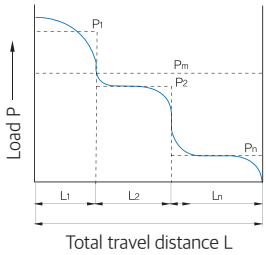

2) Change monotonously

$$P_m \fallingdotseq \frac{1}{3}(P_{min} + 2 \cdot P_{max}) \cdots\cdots (2)$$

Pmin	: Minimum load	(N)
Pmax	: Maximum load	(N)

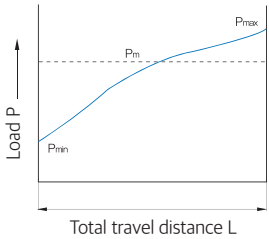

3) Change in a sine curve

a) $P_m \fallingdotseq 0.65 max$ ·····(3)

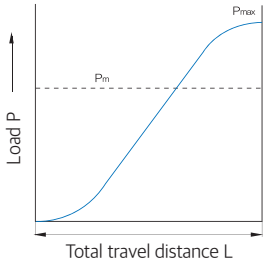

b) $P_m \fallingdotseq 0.75 max$ ·····(4)

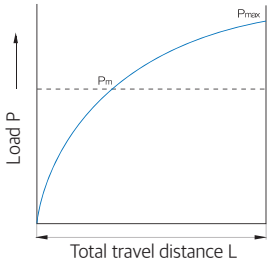

9. Rating life calculation

A rating life needs to be calculated because life of a linear motion guide differs even under the same driving conditions. Rating life of a linear motion guide is a total travel distance that a linear motion guide system composed of a certain number of units can drive without flaking in 90% of the race way surface or rolling element after being run under the same working conditions. If a ball or a roller is used as a rolling element, it is possible to calculate a rating life in the following formula.

The formula to calculate the rating life of a ball-enabled linear motion guide

$$L = \left(\frac{f_H \cdot f_T \cdot f_C}{f_W} \cdot \frac{C}{P_C} \right)^3 \times 50$$

L	: Rating life	(km)
C	: Basic dynamic load rating	(N)
P_C	: Calculated load	(N)
f_H	: Hardness factor	See Figure 3
f_T	: Temperature factor	See Figure 4
f_C	: Contact factor	See Table 2
f_W	: Load factor	See Table 3

▶ The formula to calculate the rating life of a roller-enabled linear motion guide

$$L = \left(\frac{f_H \cdot f_T \cdot f_C}{f_W} \cdot \frac{C}{P_C} \right)^{\frac{10}{3}} \times 100$$

L	: Rating life	(km)
C	: Basic dynamic load rating	(N)
P_C	: Calculated load	(N)
f_H	: Hardness factor	See Figure 3
f_T	: Temperature factor	See Figure 4
f_C	: Contact factor	See Table 2
f_W	: Load factor	See Table 3

▶ If the length of stroke and the number of reciprocating motions are constant, it is possible to calculate a life time with the use of the rating life (L) in the following formula:

$$L_h = \frac{L \times 10^6}{2 \times \ell_s \times n_1 \times 60}$$

L_h	: Life time	(N)
ℓ_s	: Length of stroke	(mm)
n_1	: No. of reciprocating motions	(min^{-1})

1) Hardness factor (f_H)

To implement the best performance of a lin ear motion guide, it is necessary to maintain appropriately the hardness and depth of the raceway surface of the block and rail that contact a rolling element (ball or roller).
WON linear motion guide has HRC58-64 surface hardness. There is no need to consid er hardness factor. If the hardness is lowered than a baseline, load capacity of a linear moti on guide decreases. In this case, it is necessar y to apply hardness factor to life calculation.

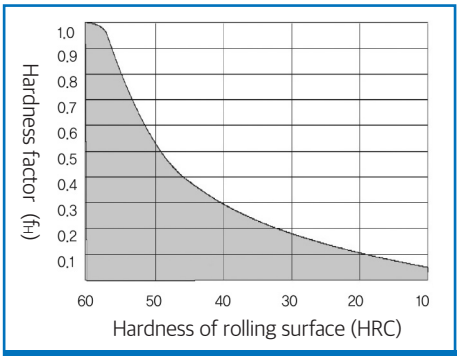

Figure 3. Hardness factor (f_H)

2) Temperature factor (f_T)

If high temperature over 100℃ is applied to a linear motion guide, it is necessary to take into account temperature factor (f_T) at the time when a liner motion guide is selected.
Please make sure to use WON linear motion guide at below 80℃. At over 80℃, please use a high-temp linear motion guide.

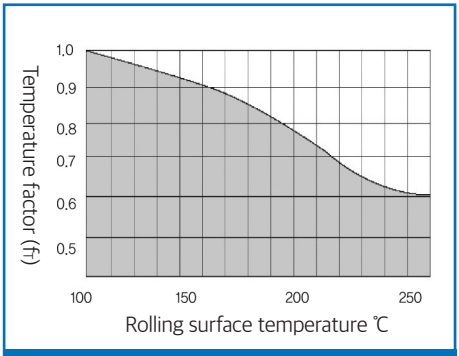

Figure 4. Temperature factor (f_T)

Note) If ambient temperature is over 80℃, it is necessary to use the materials of seal, end plate, and support plate that have specifications for high temperature.

3) Contact factor (f_C)

If over two blocks are closely assembled and mounted, uniform load may not be applied to the blocks due to difference among mounting surfaces. Therefore, it is required to multiply basic static load rating (C) and basic dynamic load rating (C_0) by the contact factor shown in Table 2.

Table 2 .

No. of blocks in close contact	Contact factor (f_C)
2	0.81
3	0.72
4	0.66
5	0.61
Over 6	0.6
Common use	1.0

4) Load factor (fw)

Generally the static load applied to the block of a linear motion guide can be calculated in formula. However, while a machine is running, the load applied to the block tends to come from vibration or impacts. Therefore, as for the vibration or impact load at high-speed running, it is necessary to consider the load factor (fw) shown in Table 3. Divide the basic dynamic load rating of a linear motion guide by a load factor (fw).

Table 3

External condition	Service Conditions	Load factor
Low	Smooth running at mild speed; no external vibration or impacts	1.0 ~ 1.3
Moderate	Low speed; moderate external vibration or impacts	1.2 ~ 1.5
High	High speed; strong vibration or impacts	1.5 ~ 2.0
Very high	Very high speed; strong vibration and impacts at running	2.0 ~ 4.0

4 Rigidity and Preload

1. Preload

A linear motion guide is preloaded in a way that it improves mechanical precision by eliminating clearance using the rolling element (ball or roller) inserted into the space between a rail and a block or in a way that it applies load to the rolling element in advance by inserting the rolling element larger than the clearance of the raceway between a rail and a block. This process will enhance the rigidity of the linear motion guide and will lessen the displacement level caused by external load.

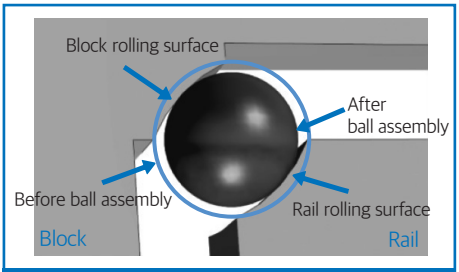

Preload setting

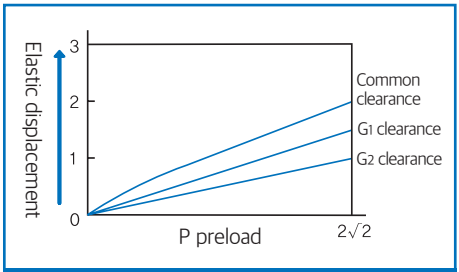

Data of preload and rigidity

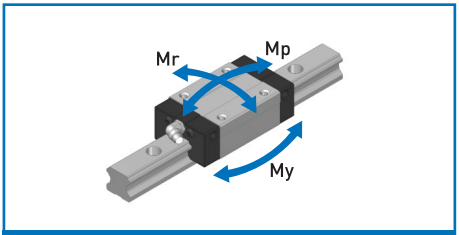

Moment rigidity

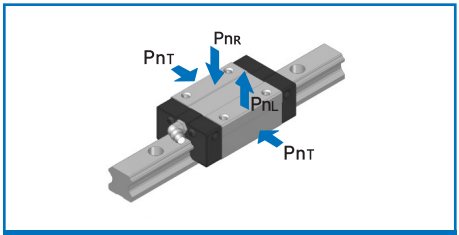

Radial rigidity

2. Radial clearance

Radial clearance refers to a total travel distance in a radial direction from the center of a block of a linear motion guide when mild load is applied to the block up and down from the center part of the rail length after the block is assembled in the rail which is then fixed to base. Radial clearance is usually classified into common clearance (no symbol), G_1 clearance (light preload), G_2 clearance (heavy load), and Gs clearance (special preload), which is selectable depending on usage. The values are standardized by form.

Preload and elastic displacement

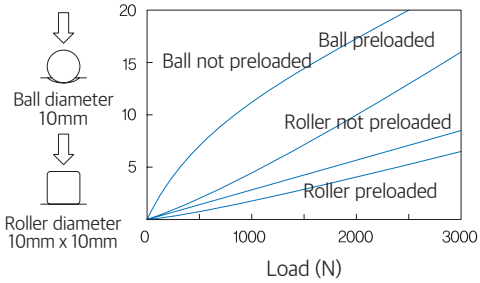

	Type	Preload symbol	preload
H	Moderate	No symbol	0 ~ 0.03 x C
	Light	G_1	0.04 ~ 0.08 x C
	Heavy	G_2	0.09 ~ 0.13 x C
S	Moderate	No symbol	0 ~ 0.03 x C
	Light	G_1	0.03 ~ 0.05 x C
	Heavy	G_2	0.06 ~ 0.08 x C
R	Light	G_1	Equivalent to 0.03C
	Heavy	G_2	Equivalent to 0.08C
	Special	G_3	Equivalent to 0.13C

Table 4. Service conditions for radial clearance (preload)

Type	Preload status	Symbol	Service conditions	Use
1. Moderate	Plus-minus clearance	No symbol (1)	· Load is applied in uniform direction and smooth running is needed · There is almost no vibration or im pact and precise running is required.	Welding machine, textile machinery, packaging machinery, various convey ors, medical equipment, woodworking machine, glass cutting machine, take-out robots, ATC, winding machine
2. Light	A small amount of minus clearance	G_1 (2)	· There is a little vibration or impact, and moment load · Light load is applied, yet high preci sion is required	Various industrial robots, measuring equipment, inspection equipment, 3D processor, laser processor, PCB drilling machine, various assembling machines, electric spark machine, punching press
3. Heavy	A large amount of minus clearance	G_2 (3)	· There are mild impact load, over-hang load and moment load. Rigid ity and high precision are required.	CNC lathe, machining center, milling machine, grinding machine, tapping center, drilling machine, hobbing ma chine, a variety of special equipment
4. Special	A small or large amount of minus clearance	Gs (4)	· Smaller clearance than that of G_1 preload; light and precise operation is required. · Larger preload than that of G_2; impact load and complex load; high strength and high rigidity are needed.	No preload, ultra-light preload, larg er-than-moderate preload, special preload customized to user condi tions, special processing machine for heavy-duty cutting

Note (1) No clearance or very small clearance.
(2) Very small minus clearance
(3) Quiet large minus clearance to enhance rigidity
(4) Preload below G_1 or over G_2 to meet service conditions

Table 5. Radial clearance of H, S & HS Series

Unit : μm

Model No.			Symbol		
			Moderate	Light preload	Heavy preload
			No symbol	G1	G2
H15	S15	-	-4 ~ +2	-12 ~ -4	-
H20	S20	-	-5 ~ +2	-14 ~ -5	-23 ~ -14
H25	S25	HS25	-6 ~ +3	-16 ~ -6	-26 ~ -16
H30	-	HS30	-7 ~ +4	-19 ~ -7	-31 ~ -19
H35	-	HS35	-8 ~ +4	-22 ~ -8	-35 ~ -22
H45	-	-	-10 ~ +5	-25 ~ -10	-40 ~ -25
H55	-	-	-12 ~ +5	-29 ~ -12	-46 ~ -29

Table 6. Radial clearance of HW Series

Unit : μm

Model No.	Symbol		
	Moderate	Light preload	Heavy preload
	No symbol	G1	G2
HB17	-3 ~ 0	-7 ~ -3	-
HB21	-4 ~ +2	-8 ~ -4	-
HB27	-5 ~ +2	-11 ~ -5	-
HB35	-8 ~ +4	-18 ~ -8	-28 ~ -18

Table 7. Radial clearance of M & MB Series

Unit : μm

Model No.		Symbol	
		Moderate	Light preload
		No symbol	G1
M5	MB5	0 ~ +1.5	-1 ~ 0
M7	MB7	-2 ~ +2	-3 ~ 0
M9	MB9	-2 ~ +2	-4 ~ 0
M12	MB12	-3 ~ +3	-6 ~ 0
M15	MBT13,MB15	-5 ~ +5	-10 ~ 0
M20	-	-7 ~ +7	-14 ~ 0

Table 8. Radial clearance of R Series

Unit : μm

Model No.	Symbol		
	Light preload	Heavy preload	Special preload
	G1	G2	G3
R25	-2 ~ -1	-3 ~ -2	-4 ~ -3
R30	-2 ~ -1	-3 ~ -2	-4 ~ -3
R35	-2 ~ -1	-3 ~ -2	-5 ~ -3

Model No.	Symbol		
	Light preload	Heavy preload	Special preload
	G1	G2	G3
R45	-2 ~ -1	-3 ~ -2	-5 ~ -3
R55	-2 ~ -1	-4 ~ -2	-6 ~ -4
R65	-3 ~ -1	-5 ~ -3	-8 ~ -5

5 Friction

1. Friction

Friction of a linear motion guide resistance is about 1/20-1/40 of an existing sliding guide be cause a rolling element (ball or roller) is assembled in between a rail and a block which is the raceway surface. In addition, the device has low starting torque because the difference between static friction and kinetic friction is very small. low power loss and temperature rise in the part of linear motion are of advantage to speedy operation. high conformability and response make it possible to do high-precise positioning.

2. Friction coefficient

Friction of a linear motion guide resistance relies on the load applied to the linear motion guide, speed, lubrication or form. In the case of light load or speedy motion, lubricant or seal is the main cause of friction resistance. In the case of heavy load or slow motion, the magnitude of load affects friction resistance.

$$F = \mu P$$

F : Friction resistance (N)
μ : Kinetic friction factor
P : Load (N)

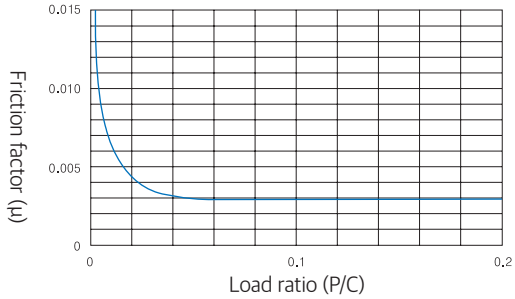

P : Load
C : Basic dynamic load rating

Figure 5. Relation between load ratio and friction factor

Common friction coefficients of various operating systems are shown below in the table, and are applied if there are appropriate lubricant or assembly and normal load.

Type of operating system	Major model number	Friction factor μ
Linear Motion Guide	H, H...S, HB, S, S...S, HS, HS...S, M, MB	0.002 ~ 0.003
	R, RS	0.001 ~ 0.002
Ball Spline	WLS, WSP	0.002 ~ 0.003
Super Ball Bushing / Linear Ball Bushing	SB, SBE, LM, LME	0.001 ~ 0.003
Cross Roller Guideway	WRG	0.001 ~ 0.0025

6 Precision

1. Precision specification

How to measure degree of a linear motion guide of travel is as follows (See Figure 6).
a. Tighten the rail to the mounting surface of the bed with a bolt at the defined torque.
b. Draw a measuring jig right up against the datum plane of the block as shown in the figure.
c. Make a measurement by making the block and measuring jig travelled in the entire section from the starting point to the end point of the rail.
d. The value measured in the above way is an error of parallelism of motion that the block has on the basis of the rail.

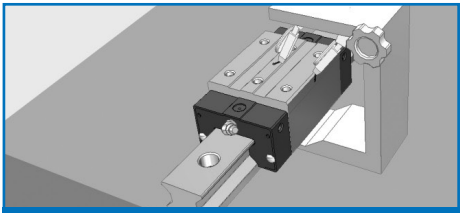

Figure 6. Parallelism of motion

The degree of parallelization between the datum plane of the block and that of rail

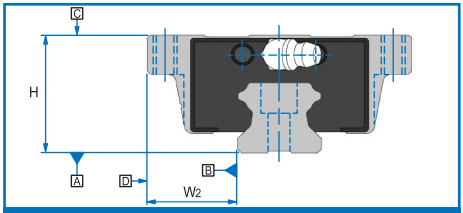

Figure 7. Difference of block

Difference between the blocks installed in the plane

2. Precision design

Table 9. Dimensional tolerance and parallelism of motion

Dimension	Description
Dimensional tolerance of height H	Distance from the base side of rail A to the top side of block C
Difference in height H	Difference in the height of blocks combined from each rail on the same plane
Dimensional tolerance of width W_2	Distance between the datum plane of rail B and the reference side of block D
Difference in width W_2	Difference between the reference side of rail B of the block combined to the rail, and the reference side of block D
Parallelism of motion of C against A	Change in the top side of block C based on the base side of rail A during the motion of the block combined to the rail
Parallelism of motion of D against B	Change in the reference side of block D based on the reference side of rail B during the motion of block combined to the rail

3. Dimension tolerance and difference

Table 10. Precision specification of linear motion guide (H, H...S, HW, S, S...S, HS, HS...S series)

Unit : mm

Dimension	Moderate	High	Precision	Super precision	Ultra precision
	No symbol	H	P	SP	UP
		P6	P5	P4	P3
Dimensional tolerance of height H	±0.080	±0.042	±0.020	±0.010	±0.008
Difference in height H	0.025	0.015	0.007	0.005	0.003
Dimensional tolerance of width W_2	±0.100	±0.050	±0.025	±0.015	±0.010
Difference in width W_2	0.030	0.020	0.010	0.007	0.003
Parallelism of motion of C against A	See Table 11.				
Parallelism of motion of D against B	See Table 11.				

Table 11. Length of rail and parallelism of motion of linear motion guide (H, H...S, HB, S, S...S, HS, HS...S Series) Unit : μm

Length of rail		Parallelism of motion				
Excess	Below	Moderate No symbol	High P6	Precision P5	Super precision P5	Ultra precision P3
-	50	5	3	2	1.5	1
50	80	5	3	2	1.5	1
80	125	5	3	2	1.5	1
125	200	5	3.5	2	1.5	1
200	250	6	4	2.5	1.5	1
250	315	7	4.5	3	1.5	1
315	400	8	5	3.5	2	1.5
400	500	9	6	4.5	2.5	1.5
500	630	11	7	5	3	2
630	800	12	8.5	6	3.5	2
800	1000	13	9	6.5	4	2.5
1000	1250	15	11	7.5	4.5	3
1250	1600	16	12	8	5	4
1600	2000	18	13	8.5	5.5	4.5
2000	2500	20	14	9.5	6	5
2500	3150	21	16	11	6.5	5.5
3150	4000	23	17	12	7.5	6

Table 12. Precision specification of miniature linear motion guide (M, MB Series) Unit : mm

Model No.	Precision spec / Dimension	Moderate No symbol	High P6	Precision P5
5	Dimensional tolerance of height H	±0.030	-	±0.015
	Difference in height H	0.015	-	0.005
	Dimensional tolerance of width W2	±0.030	-	±0.015
	Difference in width W2	0.015	-	0.005
	Parallelism of motion of C against A	See Table 13.		
	Parallelism of motion of D against B	See Table 13.		
7	Dimensional tolerance of height H	±0.040	± 0.020	±0.010
9	Difference in height H	0.030	0.015	0.007
12	Dimensional tolerance of width W2	±0.040	± 0.025	±0.015
13	Difference in width W2	0.030	0.020	0.010
15	Parallelism of motion of C against A	See Table 13.		
20	Parallelism of motion of D against B	See Table 13.		

Table 13. Length of rail and parallelism of motion of miniature linear motion guide (M, MB series)

Unit : μm

Length of rail		Parallelism of motion		
Above	Below	Moderate	High	Precision
		No symbol	H	P
			P6	P5
-	40	8	4	1
40	70	10	4	1
70	100	11	4	2
100	130	12	5	2
130	160	13	6	2
160	190	14	7	2
190	220	15	7	3
220	250	16	8	3
250	280	17	8	3
280	310	17	9	3
310	340	18	9	3
340	370	18	10	3
370	400	19	10	3
400	430	20	11	4
430	460	20	12	4
460	490	21	12	4
490	520	21	12	4
520	550	22	12	4
550	580	22	13	4
580	610	22	13	4
610	640	22	13	4
640	670	23	13	4
670	700	23	13	5
700	730	23	14	5
730	760	23	14	5
760	790	23	14	5
790	820	23	14	5

Length of rail		Parallelism of motion		
Above	Below	Moderate	High	Precision
		No symbol	H	P
			P6	P5
820	850	24	14	5
850	880	24	14	5
880	910	24	14	5
910	940	24	14	5
940	970	24	14	5
970	1000	25	14	5
1000	1030	25	16	5
1030	1060	25	16	5
1060	1090	25	16	6
1090	1120	25	16	6
1120	1150	25	16	6
1150	1180	25	17	6
1180	1210	26	17	6
1210	1240	26	17	6
1240	1270	26	17	6
1270	1300	26	17	6
1300	1330	26	17	6
1330	1360	27	17	6
1360	1390	27	18	6
1390	1420	27	18	6
1420	1450	27	18	7
1450	1480	27	18	7
1480	1510	27	18	7
1510	1540	28	19	7
1540	1570	28	19	7
1570	1800	28	19	7

Table 14. Specifications for precision of linear motion guide (R series)

Dimension	High	Precision	Super precision	Ultra precision
	H	P	SP	UP
	P6	P5	P4	P3
Dimensional tolerance of height H	±0.042	±0.020	±0.010	±0.008
Difference in height H	0.015	0.007	0.005	0.003
Dimensional tolerance of width W_2	±0.050	±0.025	±0.015	±0.010
Difference in width W_2	0.020	0.010	0.007	0.003
Parallelism of motion of C against A	See Table 15.			
Parallelism of motion of D against B	See Table 15.			

Table 15. Length of rail and parallelism of motion of linear motion guide (R series)

Unit : μm

Length of rail		Parallelism of motion			
Above	Below	High	Precision	Super precision	Ultra precision
		P6	P5	P4	P3
–	50	3	2	1.5	1
50	80	3	2	1.5	1
80	125	3	2	1.5	1
125	200	3.5	2	1.5	1
200	250	4	2.5	1.5	1
250	315	4.5	3	1.5	1
315	400	5	3.5	2	1.5
400	500	6	4.5	2.5	1.5
500	630	7	5	3	2
630	800	8.5	6	3.5	2
800	1000	9	6.5	4	2.5
1000	1250	11	7.5	4.5	3
1250	1600	12	8	5	4
1600	2000	13	8.5	5.5	4.5
2000	2500	14	9.5	6	5
2500	3150	16	11	6.5	5.5
3150	4000	17	12	7.5	6

4. Selection of precision class

Table 16. For the selection of precision class of linear motion guide by unit, please refer to the table shown below.

Application	Unit	Precision class					Preload		
		Preload type	High	Precision	Super precision	Ultra precision	Preload type	Light preload	Heavy preload
		No symbol	H	P	SP	UP	No symbol	G1	G2
			P6	P5	P4	P3			
Machine Tool	CNC Lathe		●	●	●				●
	Machining center		●	●	●				●
	NC milling machine			●	●				●
	CNC tapping machine		●	●	●				●
	NC boring machine		●	●	●				●
	NC drilling machine		●	●	●				●
	3D engraving machine		●	●	●				●
	Jig boring machine		●	●	●				●
	EDM electric spark machine			●	●	●		●	●
	Grinding machine			●	●	●			●
Semiconductor equipment	Prober equipment					●		●	●
	Wire bonder				●	●		●	●
	Slicing machine				●	●		●	
	Dicing machine				●	●		●	
	IC test handler			●	●			●	
	PCB laser via-hole driller				●			●	
	PCB inspection equipment			●	●			●	
	Laser marker			●				●	
	Chip mounter			●	●			●	
F P D	Mac/Mic inspection equipment				●	●		●	
	Phantom inspection equipment				●	●		●	
	Exposure				●	●		●	
	Laser repair			●	●	●		●	
	Lighting inspection equipment		●	●				●	
	Coater machine			●	●			●	
	Chip bonding machine		●	●				●	
	Dispenser machine		●	●				●	

Application	Unit	Precision class					Preload		
		Preload type	High	Precision	Super precision	Ultra precision	Preload type	Light preload	Heavy preload
		No symbol	H	P	SP	UP	No symbol	G1	G2
			P6	P5	P4	P3			
F P D	Scriber		●	●				●	
	Glass edge grinding machine		●	●				●	
	FPD measuring test equipment			●	●			●	
	Laminating equipment		●	●				●	
	Indentation test equipment								
	Prober equipment								
Industrial machine	Punching press		●					●	
	Tire molder	●						●	
	Tire vulcanizer	●						●	
	Auto-shearing machine	●						●	
	Auto-welding machine	●					●	●	
	Conveyor	●					●		
	Textile machine	●					●		
	Injection molding machine	●					●	●	
Industrial robot	Cartesian coordinated robot	●	●	●				●	
	Gantry robot	●	●					●	
	LTR robot		●	●				●	
	Take-out robot	●						●	
	Cylindrical coordinated robot		●					●	
	Vacuum robot		●	●				●	
	Robot carriage	●							
	Linear actuator		●	●	●		●	●	
Others	Office machine	●					●		
	FA transport equipment	●					●		
	Medical equipment	●					●	●	
	Welding machine	●					●		
	Painting machine	●					●		
	Precision XY table		●	●	●			●	
	UVW stage		●	●				●	
	3D measuring machine			●	●	●		●	

7 Lubrication

1. Purpose

The purpose of lubricating a linear motion guide is to create an oil surface between the raceway surface of rail and block and a rolling element so as to avoid the direct contact of metals, and thereby to reduce friction, wear and heat, preventing the raceway surface and the rolling element from being overheated and melted to be adhered to each other. Moreover, the oil surface created between the raceway surface and a ball decreases load-induced contact stress, so that it can improve the rolling contact fatigue life and prevent rust. A linear motion guide is equipped with a seal. Nevertheless, grease inside the block oozes while the device is in operation. For this reason, it is required to supply a lubricant at a time and interval appropriate to each service condition.

2. Selection of lubricant

To achieve the best performance of a linear motion guide, it is necessary to select the lubricant suitable for service conditions. Lubricants used for a linear motion guide include grease and oil. It is possible to select an appropriate lubricant and lubrication method depending on service conditions, load, operating speed, assembly type, etc.

3. Grease lubrication

Grease is a semisolid lubricant that consists base oil , thickener, and additives.
Generally, when a linear motion guide is lubricated with grease, lithium soap grease is used. In the con dition of high load or the condition of use, the grease mixed with extreme-pressure additive is used. To apply a linear motion guide to a high-vacuum environment or a cleanroom, it of desirable to select a type of grease excellent at low evaporation and low dust generation.

1) Grease refilling

For grease refilling in a linear motion guide, it is necessary to supply a sufficient amount of grease with the use of a grease nipple until remaining grease is discharged. It is appropriate to fill up 50% or so volume block with grease. After refilling, rolling resistance can be increased. In order to reduce the rolling resistance, it is better to take a test run about 20 times prior to the operation.

2) Refill interval

If a travel of linear motion guide exceeds a certain time, its lubricating performance declines. So it is re quired to supply an appropriate amount of grease at a proper time depending on service conditions and environment. Usually, it is necessary to supply grease when travel of the device distance reaches 100km.

4. Oil lubrication

When a linear motion guide is lubricated with oil, it is recommended to use an oil lubricant with high viscosity ($68mm^2$ /sec) under the condition of high load, and an oil lubricant with low-viscosity ($13mm^2$ /sec) under the condition of high velocity. As for oil lubrication, the recommended oil supply amount per block is $0.3cm^3$ per hour.

Table 17. Inspection and refilling time of lubricant

Type	Checkpoints	Inspection cycle	Refilling time
Grease	• Check if there is any cutting chip, dust, foreign substance • Check if there is any contamination by other substances	3-6 months	• Generally, supply grease 1-2 times every year. • Usually, supply grease more than once every year if travel exceeds 100km/year. • Refill depending on a situation after checking the status of grease.
Oil	Check a lubricant quantity, contamination, and foreign substance	3-6 months	• Refill depending on the results of inspection, and determine an optimal amount depending on volume of the oil tank
	Check an oil level (Supply oil mist)	Before every operation	• Refill appropriately after checking how much oil is consumed. • Define an optimal amount after how much oil is consumed

※ Please DO NOT use any oil that affects synthetic resin, a material of linear motion guide parts.

Table 18. Lubricants used for linear motion guide

Application	Main use	Product name	Manufacturer	Manufacturer	Base oil	Type of thickener
Common use (extreme-pressure additive incl.)	Industrial machine, machine tool	BW EP NO.2	BWC	-20 ~+105	Mineral oil	Lithium
Common use	Machine tool, electric spark machine, industrial robot, etc.	GADUS S2 V220 00	SHELL	-30 ~+110	Mineral oil	Lithium
Clean & low dust generation	Semiconductor, FPD equipment	SNG 5050 DEMNUM	NTG DAIKIN	-40 ~+1200 -50 ~+300	Synthetic oil	Urea
Eco-friendly	Semiconductor AMOLED process equipment, driving gear in vacuum chamber	FOMBLIN Krytox High vacuum grease	AUSIMONT DuPont Dow Corning	-20 ~+250	Synthetic oil	Re-fluoride Ethylene fluorinated
Machine tool	Excellent dust prevention and strong oil film strength Hardly emulsified to clearance, so suitable for machine tools	VACTRA NO.2 SLC DTE Oil	ExxonMobil	-20 ~+100	Oil	Way oil Turbine oil
Special use	Corrosion proofing	6459 Grease	SHELL	-20 ~+100	Mineral oil	Polyurethane

8 Surface Treatment

1. Surface treatment

WON ST uses the following methods for the optimal surface treatment of a linear motion guide in order to prevent rust and improve the quality of its appearance.

2. Types of surface treatment

1) Electrolytic rust-preventive black coating (black Cr plating)

This is an industrial black chrome coating type that is used to improve the corrosion proof at low cost. It can achieve better corrosion proof than martensite stainless steel and be used to enhance appearance and prevent the reflection of light.

2) Industrial hard chrome plating

A hardness of surface is over 850HV, so that its wear proof is excellent and its corrosion proof is comparable with that of martensite stainless steel. WON ST offers such surface treatment types such as alkakine col oring and color alumite treatment at a customer request. To use a linear motion guide after its sur face treatment, it is necessary to set a high safety factor.

3) Fluoride low-temperature Cr plating

It is also called "Raydent." This is a combined surface treatment type of black Cr coating with special fluoride resin coating that is used in the places requiring high corrosion proof, or in cleanroom that needs to generate low dust.

9 Dust Proof

1. Dust proof

To make use of the characteristics and performance that a linear motion guide has, it is important to protect the device against external foreign substances which are causes of abnormal wear and its shortened life span. If any dust or foreign substance is expected to be mixed in, it is required to use an effective sealing or dust-proofing system.

2. Types of dust proof

WON Linear Motion Guide has basically a seal assembled. If necessary, it I possible to mount a metal scraper on the device before shipment.

1) Exclusive seal

In order to protect the inside of a bearing against foreign substances, an end seal and a side seal are installed on the both ends and bottom of a block, and an inner seal is mounted on the inside of the block.

2) Metal scraper

A metal scraper is installed outside an end seal, so that it is effective at protecting a device against foreign substances, such as hot spatter or slag generated in a welding process.

10 Measures for Use in Special Environments

WON Linear Motion Guide is useful in various special applications if being used appropriately in accord ance with such service conditions as material, surface treatment, dust proof, and grease.

Table 19.

Application	Conditions of use	Measures	
Clean (Clean room) -Semiconductor, FPD, medical equipment-	• If used in a clean environment, it is required to minimize dust or particles generated in a linear motion guide, as most as possible.	Lubricant	• For a clean environment • Use the grease that generates low dust
		Rust prevention	• Black Cr coating • Fluoride low-temperature colorimet ric Cr plating (Raydent treatment) • Use high-corrosion resistant stainless steel as a material
Vacuum -Semiconductor, FPD deposition equipment -	• If used in a vacuum environment that needs to maintain vacuum status, it is required to control the out gas discharged by a linear motion guide as most as possible. • Excellent rust prevention is required, since rust-prone parts cannot be used in this environment.	Lubricant	• Use the grease for a vacuum en vironment.
		Rust prevention (Out Gas)	• Use high-corrosion resistant stainless steel as a material • Use a self-oiling agent with special coatings like fluoroplastic coatin • Use ceramic as a material
High-temperature environment	• If used in a higher temperature environment than general one, where heat proof of a ma terial is important, it is re quired to use metals for plastic synthetic resin parts	Lubricant	• Use the grease for high-temperature.
		Material	• Use an end seal, side seal+ double seal. • Use a double seal. • Use a special seal for high temperature
Dust	• If used in an environment where there are a lot of cutting chips, wood dust, and dust, it is required to take dust proof measures to protect the block against foreign substances.	Seal	• Use a plastic synthetic resin cap • Use a metal cap • Use a metal scraper
		Cap	• Use a plastic synthetic resin cap. • Use a metal cap • Use a seal plate
		Holding door	• Use an exclusive holding door • Use an sealing and all-in-one holding door
Spatter	• If exposed to a spot welding or arc welding environment, it is required to take measures to prevent hot spatters from being fixed onto a rail	Spatter	• Fluoride black Cr coating
		Seal	• Use a metal scraper
		Dust resistance	• Use a metal cap • Use a seal plate

11 Placement and Installation

1. Placement and structure

To mount a linear motion guide on equipment, it is required to understand the overall structure of the equipment first, and then check the sizes of the base and a transfer table. To determine the optimal in stallation of a linear motion guide, it is necessary to take into account mounting directions such as placing vertically, in slope, or in the back, load, and the life span required.

Installation layout of linear motion guide (examples)

(1) Assembly of the top side of block, block transfer

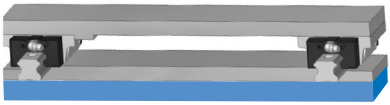

(2) Assembly of the back side of block, rail transfer

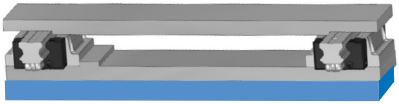

(3) Assembly of the flank of rail, block transfer

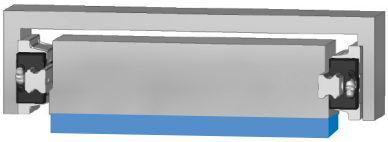

(4) Assembly of the flank of block, rail transfer

(5) Assembly of the wall side of block, rail transfer

(6) Assembly of the wall side of rail, block transfer

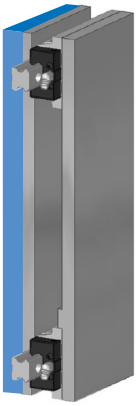

(7) Symmetrical assembly of the top and bottom of block, block transfer

(8) Symmetrical assembly of the top and bottom of block, rail transfer

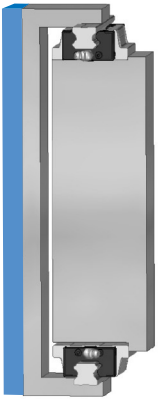

2. Mounting and fixation

In the structure affected by both vibration and impact, in the place that has complex load or moment load, it is required to fix a linear motion guide in a different way from a general one.

This is a widely used method. Push a pressure plate from the flank after slightly protruding a block and a rail. In this case, it is required to prevent the corners of the rail and block from being in contact with each other.

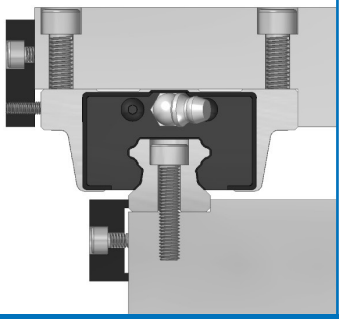

Figure 8. Pushing a pressure plate from the flank

This is a way of fastening a tapered fixture with a bolt. Even slightly bolting up generates big force in a horizontal direction. If it is bolted up too much, deformation may occur in rail, for instance, which needs to be taken a caution.

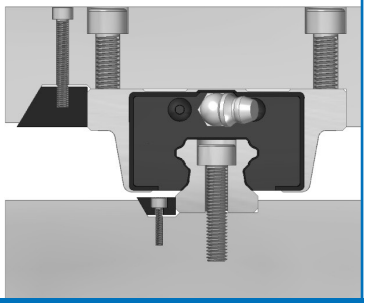

Figure 9. Pushing a tapered plate

You must be required to use miniature bolts due to the spatial constraint when a rail is pushed by a bolt. It is favorable to use as many bolts for pushing as possible.

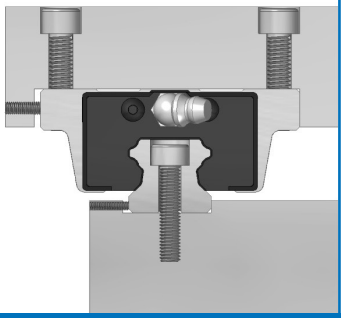

Figure 10. Pushing a bolt from the flank

This is a way of pushing a needle roller with the head of a countersunk screw. It is careful to push it to fit the screw.

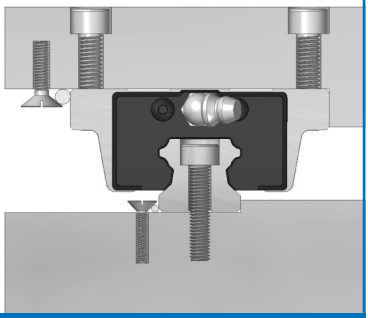

Figure 11. Pushing a roller

3. Design of the mounting surface for installation

Design and management of the mounting surface

The precision of mounting surface of a linear motion guide and an error in installation cause unexpected load and stress to the device, negatively influencing the travel and life of the device. So, it is required to take caution to prevent the harmful effects.

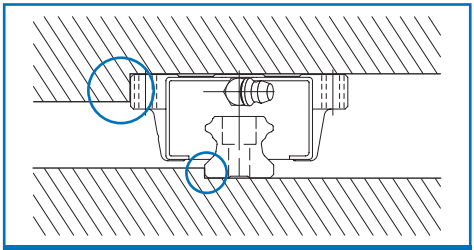

Figure 12. Shape of edges

Management of the vertical angle of the datum plane for installation

If the vertical angle of the installation surface of a rail or block and of its datum plane is inaccurate, it might not be assembled precisely. So, it is required to review an error of vertical angel in design.

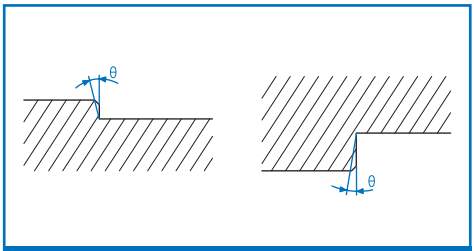

Figure 13.

Management of the datum plane for assembly

In designing a linear motion guide, it is important to manage the height and thickness of its assembly datum plane. If the height is too high or low, a rail or a block may fail to be assembled precisely due to its surface attachment; the application of eccentric load, horizontal load and moment load may loosen the strength of joint and cause poor assembly. In this case, precision fails to meet the requirements in de sign. So, attention must be paid.

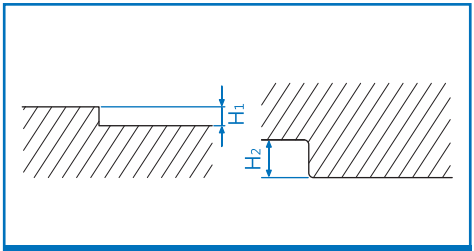

Figure 14. Vertical angle of contact datum plane

Management of the shape of contact corner

If the right-angled corner of a rail or block installed to the mounting surface of a linear motion guide is processed in R-shape and R value is bigger than the dimension of the surface of the rail or block, it is possible to cause a failure of precise assembly to the datum plane. So, attention must be paid.

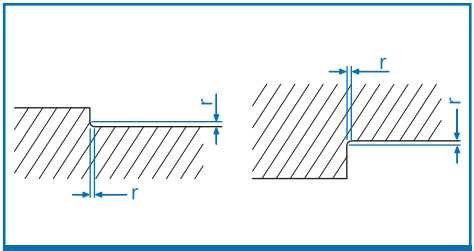

Figure 15. Dimension of contact datum plane

Management of the dimensional tolerance between datum plane and bolt in design

If the dimensional tolerance between the contact datum plane of a rail or block of a linear motion guide and a mounting hole is too big, precise assembly fails. So, attention must be paid. Generally the dimensional tolerance is ±0.1mm as a reference value. If the distance tolerance between the assembly datum plane of rail or block and the assembly bolt hole is too wide or narrow, precise assembly may fail. So, it is required to set the tolerance to W3±0.1mm in design.

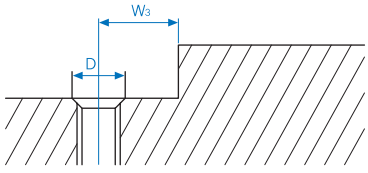

Figure 16. Dimensional tolerance between contact datum plane and mounting hole

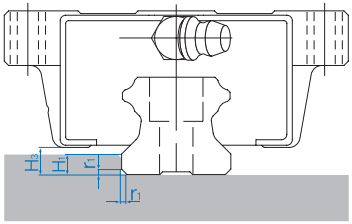

Assembly of rail datum plane

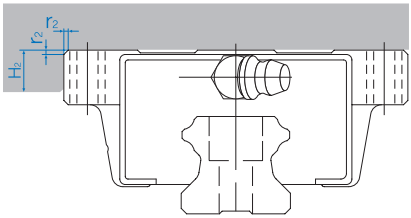

Assembly of block datum plane

Figure 17. Height of the raised spot of mounting surface and radius of the corner R

- Make a datum plane that can contact the flank in order to secure the assembly convenience or precise position and the assembly surface of a rail or block in the installation process of a linear motion guide.
- The height of the raised spot of contact datum plane or the radius of corner depend on the specifications of a linear motion guide. So please see the table shown below.
- To prevent the raised spot from being deformed by the pressing force from above or pushing force from side, secure sufficient thickness in design.

H, H...S, HB, S, S...S, HS, HS...S Series

Unit : mm

Model No.	Radius of corner of the installation to rail r_1(max.)	Radius of corner of the installation to block r_2(max.)	Height of raised spot of the installation to rail H_1	Height of raised spot of the installation to block H_2	H_3
15	0.5	0.5	3	4	4.7
20	0.5	0.5	3.5	5	6
25	1	1	5	5	7
30	1	1	5	5	7.5
35	1	1	6	6	9
45	1	1	8	8	10
55	1.5	1.5	10	10	13

HB Series

Unit : mm

Model No.	Radius of corner of the installation to rail r_1(max.)	Radius of corner of the installation to block r_2(max.)	Height of raised spot of the installation to rail H_1	Height of raised spot of the installation to block H_2	H_3
17	0.4	0.4	2	4	2.5
21	0.4	0.4	2.5	5	3.3
27	0.4	0.4	2.5	5	3.5
35	0.8	0.8	3.5	5	4

S, S...S Series

Unit : mm

Model No.	Radius of corner of the installation to rail r_1(max.)	Radius of corner of the installation to block r_2(max.)	Height of raised spot of the installation to rail H_1	Height of raised spot of the installation to block H_2	H_3
15	0.5	0.1	2.5	4	4.5
20	0.5	1	4	5	6
25	1	1	5	5	7

M, MB Series

Unit : mm

Model No.	Radius of corner of the installation to rail r_1(max.)	Radius of corner of the installation to block r_2(max.)	Height of raised spot of the installation to rail H_1	Height of raised spot of the installation to block H_2	H_3
5	0.2	0.2	0.8	2	1
7	0.2	0.2	1.2	2.5	1.5
9	0.2	0.2	1.5	3	2
12	0.2	0.2	2.5	4	3
13	0.2	0.2		4.5	4
15	0.2	0.2	3	4.5	4
20	0.2	0.2	4	5	5

R Series

Unit : mm

Model No.	Radius of corner of the installation to rail r_1(max.)	Radius of corner of the installation to block r_2(max.)	Height of raised spot of the installation to rail H_1	Height of raised spot of the installation to block H_2	H_3
25	1	1	4	5	6.5
30	1	1	4.5	5	7
35	1	1	5	6	7
45	1.5	1.5	6	8	9.5
55	1.5	1.5	8	10	10
65	1.5	2	9	10	13

4. Error tolerance of the mounting surface for installation

1) Auto-adjusting and error-absorbing abilities

A linear motion guide has an excellent auto-adjusting ability. Therefore, even though the structure with rail assembly is slightly deformed processing error may occur a little, the straightness or parallelism of a table after assembly is better than the precision in processing before assembly, and quite linear running is available.

2) Error tolerance of the degree of parallelization when using 2-axis assembly (P_1)

The error tolerance of the degree of parallelization when a 2-axis assembly is used is shown below

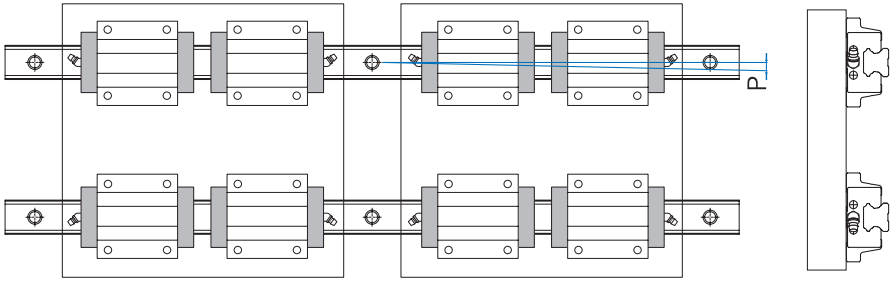

Figure 18. Error tolerance of the degree of parallelization (P)

H, H...S, HS, HS...S Series

Unit : μm

Model No.	Common clearance	G_1 clearance	G_2 clearance
15	25	18	-
20	25	20	18
25	30	22	20
30	40	30	27
35	50	35	30
45	60	40	35
55	70	50	45

HB Series

Unit : μm

Model No.	Common clearance	G_1 clearance	G_2 clearance
17	20	15	-
21	25	18	-
27	25	20	-
35	30	22	20

S, S...S Series

Unit : μm

Model No.	Common clearance	G_1 clearance	G_2 clearance
15	25	18	-
20	25	20	18
25	30	22	20

M, MB Series

Unit : μm

Model No.	Common clearance	G_1 clearance
5	2	-
7	3	-
9	4	3
12	9	5
13	10	6
15	10	6
20	13	8

R Series

Unit : μm

Model No.	G_2 clearance	G_3 clearance
25	7	5
30	9	6
35	10	7
45	12	9
55	16	11
65	22	16

3) Error tolerance of height in 2-axis assembly (P_2)

If an error of height in installation is too big, block distortion occurs and its rigidity may be weakened due to block distortion and changes in the raceway groove of the block and rail block and in the contact angle of a ball or roller as a rolling element.

The error tolerance of height level (x) when a 2-axis linear motion guide is used is as follows.

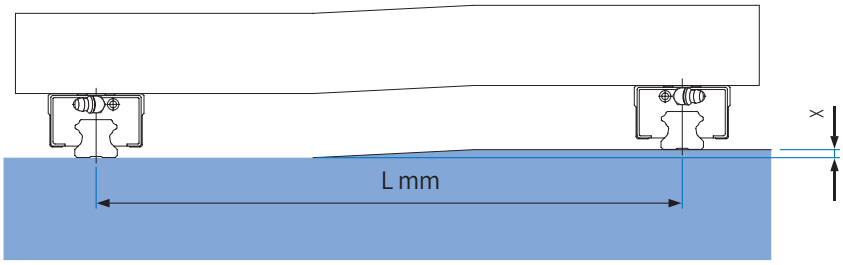

Figure 19. Error tolerance of height level in 2-axis (X)

H, H...S, S, S...S, HS, HS...S Series

Unit : μm

Model No.	Common clearance	G_1 clearance	G_2 clearance
15	0.26L	0.17L	-
20	0.26L	0.17L	0.10L
25	0.26L	0.17L	0.14L
30	0.34L	0.22L	0.18L
35	0.42L	0.30L	0.24L
45	0.50L	0.34L	0.28L
55	0.60L	0.42L	0.34L

HB Series

Unit : μm

Model No.	Common clearance	G_1 clearance	G_2 clearance
17	0.13L	0.04L	-
21	0.26L	0.17L	-
27	0.26L	0.17L	-
35	0.26L	0.17L	0.14L

M, MB Series

Unit : μm

Model No.	Common clearance	G_1 clearance
5	0.04L	-
7	0.05L	-
9	0.07L	0.01L
12	0.10L	0.02L
13	0.12L	0.04L
15	0.12L	0.04L
20	0.14L	0.06L

R Series

Unit : μm

Model No.	G_2 clearance	G_3 clearance
25, 30, 35, 45, 55, 65	0.17L	0.12L

5. Description of the datum plane for installation

The datum plane of WON ST Linear Motion Guide is the ground surface on the opposite side of WON mark shown in the block.

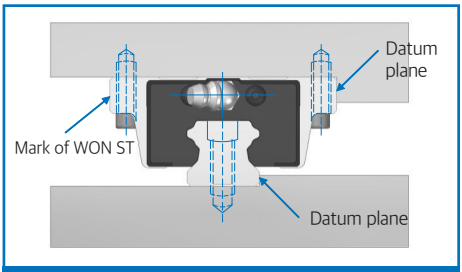

Figure 20. Linear motion guide on the reference axis

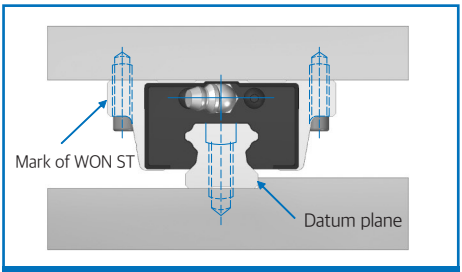

Figure 21. Linear motion guide on the driven shaft

6. Rail connection

If it is necessary to use a longer rail than the one supplied, it is possible to connect rails for the purpose of use. The mark on the rail indicates the point where rails should be linked. If a block passes through the connecting points simultaneously, that may affect travel of the unit or cause a delicate hitch. To solve this problem, it is recommended to make the connecting points intercrossed.

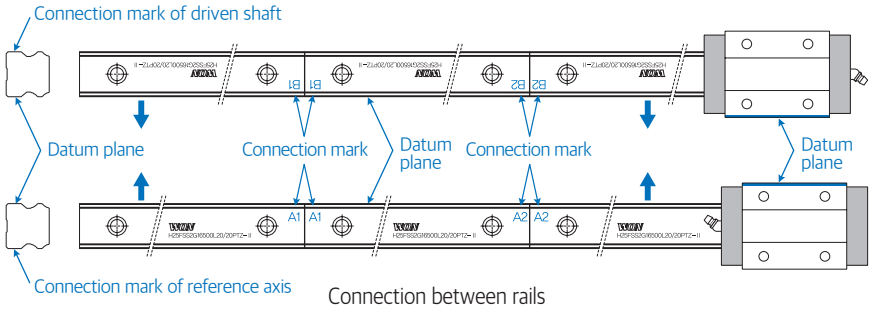

Connection between rails

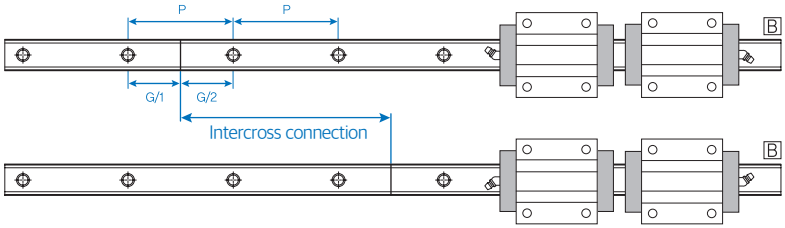

Intercross connection

Figure 22. Rail connection

7. Installation

1) Installation of linear motion guide in the equipment exposed to vibration and impacts

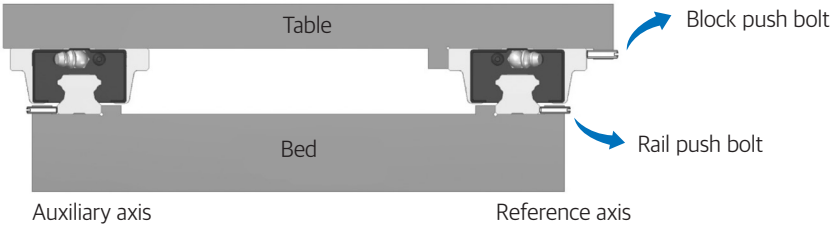

① Install a rail

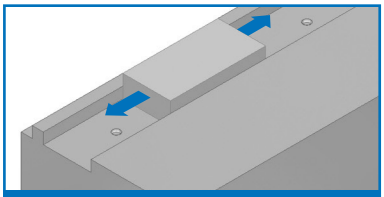

Step 1: Check the installation surface for a rail.

Prior to installation, remove burr, dust, and dust prevention oil completely.

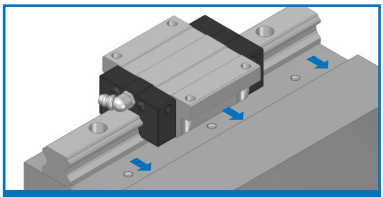

Step 2: Draw a rail tightly to the datum plane

Gently place a linear motion guide on the bed, and push it in the opposite direction of datum plan of the bed.

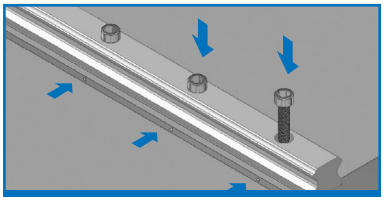

Step 3: Fasten bolts temporarily

Check the status of bolts and fasten every bolt temporarily.

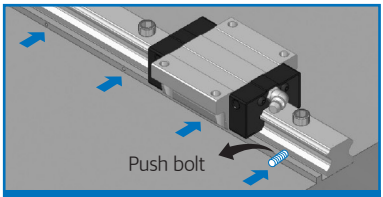

Step 4: Fasten push bolts

Fix push bolts to make sure that the rail is in parallel with the datum plane of the bed.

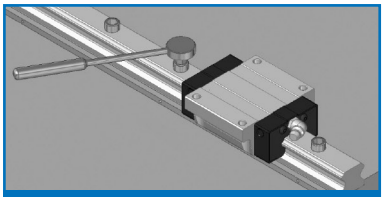

Step 5

- Step 5: Fasten all bolts with a torque wrench.
  Fasten all bolts at the recommended torque. Fasten the bolt in the center first and then continue fastening each bolt toward both ends in order to maintain precision of the rail in the assembly process.
- Step 6: Assemble an auxiliary axis.
  Repeat the above procedure for the installation of an auxiliary axis.

② Install a block

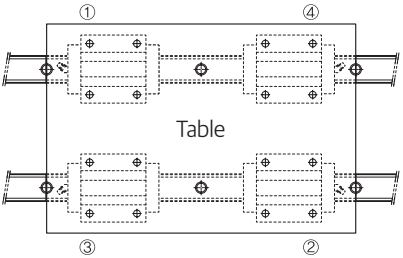

- Step 1: Assembly bolts temporarily
  Place a table on the block and fasten all bolts temporarily.
- Step 2: Fasten bolts tightly
  Fix the main rail block to the opposite side of datum plane of the table with the use of a push bolt, and adjust position of the table.
- Step 3: Fix and fasten assembly bolts
  Completely fasten all bolts on the datum plane and subsidiary side in the order of ① to ④.

2) Installation of linear motion guide without a push bolt

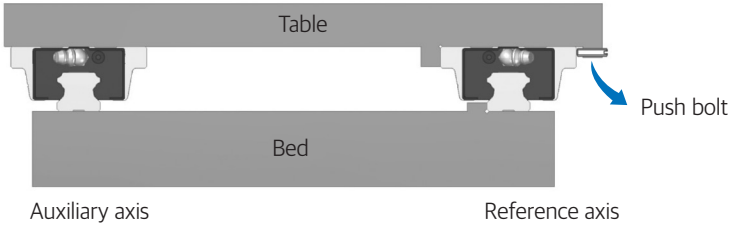

① Install a master rail

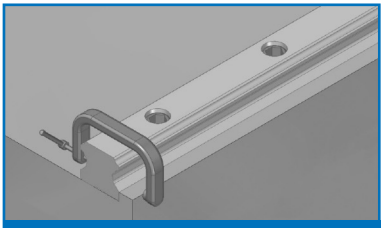

Use a vise

Fasten bolts temporarily and push a master rail toward the datum plane using a C-vise. Fasten the bolts sequentially at the pre scribed torque.

② Install an auxiliary rail

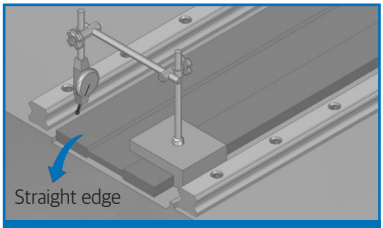

Straight edge

Place a straight edge in between two rails, and make it in parallel with the master rail fixed temporarily. Check the degree of par allelism with a dial gauge, and adjust the rail if needed. And then, fasten bolts in order

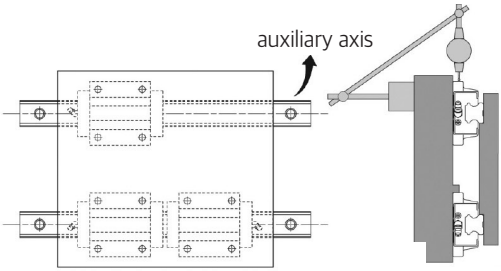

• Assembly using a table

1. Fix two blocks on the datum plane and one block on the auxiliary axis to a table.
2. Fix another auxiliary block and rail to the ta ble and bed temporarily.
3. Place a dial gauge on the table and make sure that a prober of the gauge contacts the auxiliary axis of the block.
4. Separate the table from the end of the rail, and check parallelization between the block and the auxiliary rail.
5. Fasten bolts in order.

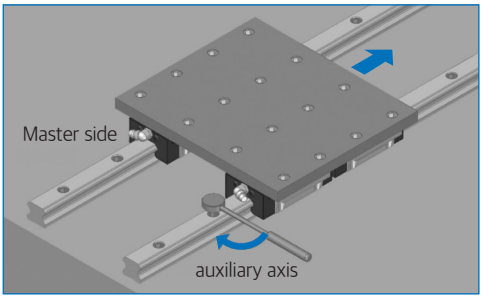

• Assembly using a rail on the reference axis

1. Fix two blocks on the datum plane and one block on the auxiliary axis to a table.
2. Fix another auxiliary block and rail to the ta ble and bed temporarily.
3. Separate the table from one rail and make adjustment in the way of parallelization with the auxiliary rail in consideration of rolling resistance in movement.
4. Fasten bolts in order.

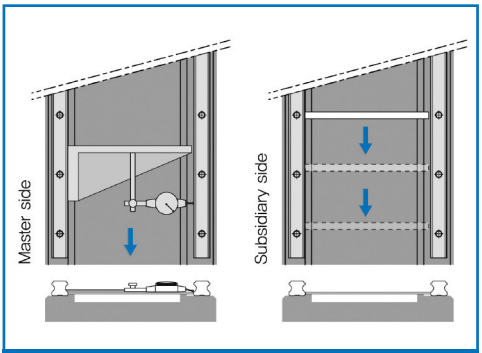

Assembly using a jig

Move the postiion of a block sequentially at the end of the master rail every bolt pitch, and adjust parallelization between the datum plane of the master rail and the master plane of the auxiliary rail with the use of a special jig. Fasten bolts in order.

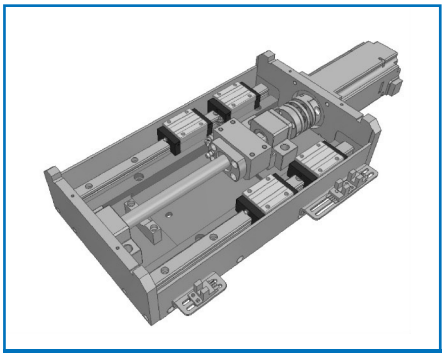

Completion of the installation

3) Installation of a block without the datum plane for a reference rail

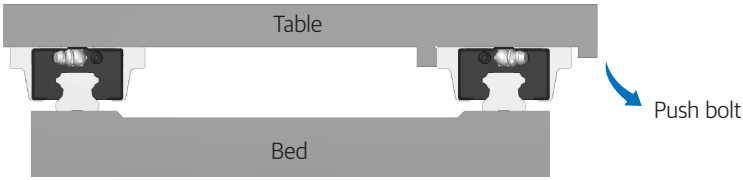

① Install a reference rail

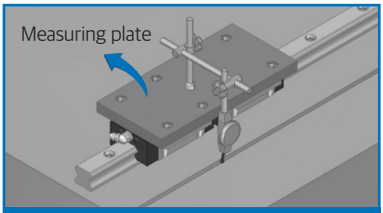

Use a temporary datum plane

Fix two blocks together onto the meas uring plate and install a temporary datum plane near the rail mounting on the bed. Check the degree of parallelism of the rail, and fasten bolts in order.

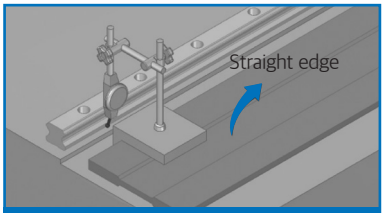

Use a straight edge

Fix a rail to the bed temporarily. Adjust it to be in straight life with the use of a dial gauge. Fasten bolts in order.

② Apply the same method when installing an auxiliary block and rail.

4) Measure precision after installation

It is possible to check the precision of travel by fixing two blocks onto the measuring plate. To meas ure precision, either use a straight edge and check a measurement with a dial gauge, or use a laser interferometer.

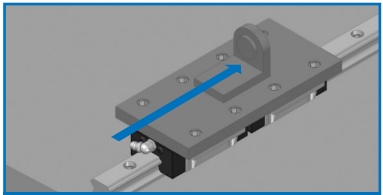

Measure using a laser interferometer

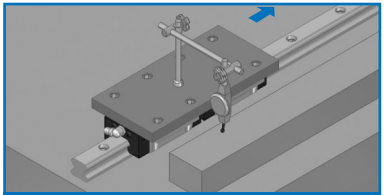

Measure using a dial gauge
with the use of a straight edge

8. Torque used for fastening bolts in assembly

1) Select the optimal torque for bolts

To assemble a rail of a linear motion guide, it is required to apply bolt torque appropriately in consideration of the material of the mounting surface or bolts. Inaccurate bolt torque may affect the mounting precision of the rail. So please use a torque wrench.

2) Recommended torque by the material of the mounting base

Unit : N·m

Bolt specification	Torque value (Unit : N·m)		
	Steel	Casting	Aluminum
M3	2	1.3	1
M4	4	2.7	2
M5	8.8	5.9	4.4
M6	13.7	9.2	6.8
M8	30	20	15
M10	68	45	33
M12	120	78	58
M14	157	105	78
M16	196	131	98
M20	382	255	191

9. Bolt fastening direction by linear motion guide type

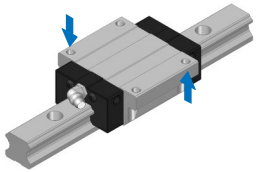

H-FN, H-FL, H-FNA, H-FLA, HB-F, H-FN...S, H-FL...S, H-FNA...S, H-FLA...S

Since the flange of a block is tap-processed and the counter bore is processed in the bottom, it is possible to tighten bolts in the up and down direction as indicated by the arrows.
But, to fasten bolts from bottom to top, it is recommended to use one size smaller.

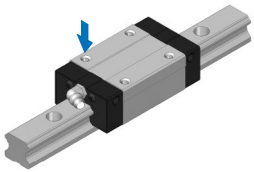

H-RN, H-RL, HB-R, H-RN...S, H-RL...S

Since the square body of the block is tap-processed, it is used at the time when bolts need to be fastened from top to bottom as indicated by the arrow

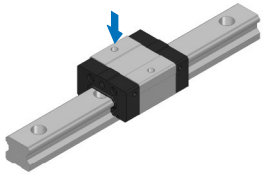

S-RC, S-RN, S-RC...S, S-RN...S

Since the square body of the block is tap-processed, it is used at the time when bolts need to be fastened from top to bottom as indicated by the arrow

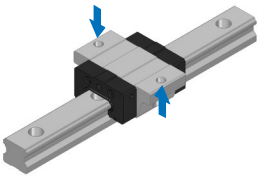

S-FC, S-FN, S-FC...S, S-FN...S

Since the flange of a block is tap-processed and the counter bore is processed in the bottom, it is possible to tighten bolts in the up and down direction as indicated by the arrows.
But, to fasten bolts from bottom to top, it is recommended to use one size smaller.

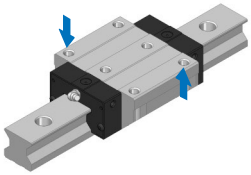

R-FN, R-FL

Since the flange of a block is tap-processed and the counter bore is processed in the bottom, it is possible to tighten bolts in the up and down direction as indicated by the arrows.
But, to fasten bolts from bottom to top, it is recommended to use one size smaller.

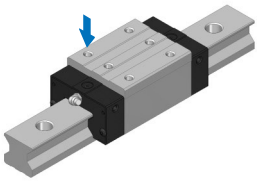

R-RN, R-RL, RS-RN, RS-RL

Since the square body of the block is tap-processed, it is used at the time when bolts need to be fastened from top to bottom as indicated by the arrow.

12 Types of Linear Motion Guide

1. Linear Motion Guide H Series

1) Structure of H Series

WON Linear Motion Guide H Series has a four-row circular arc-groove structure in the raceway groove of a rail or block. In addition, it has a 4-direction equal load type in which it can bear equal load rating for vertical compression load, tensile load, and horizontal load as its ball as a rolling element is combined at 45 degree. Therefore, the model reduces friction resistance and ensures smooth motion and long life. By imposing preload on the balls, it is possible to enhance the rigidity of a linear motion guide and to minimize its deformation for external load.

2) Features of H Series

a. High quality, high precision, and elimination of labor.
b. High rigidity and high precision for implementing stable travel precision for a long time.
c. Excellent wear resistance and friction resistance that ensure a long life.
d. The face-to-face duplex structure just like the D/F combination of ball bearing, excellent at auto-adjusting and error-absorbing.
e. Various specifications for easy design.
f. Easy to use due to high compatibility of rail and block.

2. Spacer Chain Linear Motion Guide H...SSeries

1) Structure of H...S Series

Like H Series, Linear Motion Guide H...S Series has the 4-direction equal load type and auto-adjusting face-to-face D/F structure. It uses a ball as a rolling element and has a spacer between balls to prevent them from colliding each other in rolling motion. Since it makes less noise and more stable circulating motion than a full-ball type, it is possible to implement quiet running at high speed. In addition, the spacer can serve as a pocket of a lubricant.

2) Features of H...S Series

a. As a spacer-incorporated type that improves frictional properties and prevents the collision of balls, the model not only allows stable circulating motion and smooth running but also reduces noise. By attach ing a special lubricating seal for a longer life span, it is possible to be free of maintenance.
b. Since a resin spacer is applied to the model, it is possible to prevent the collision of balls and the loss of oil film, and to generate less particles and dust.
c. High quality, high precision, and elimination of labor.
d. High rigidity and high precision for implementing stable travel precision for a long time.
e. Excellent wear resistance and friction resistance that ensure a long life.
f. The face-to-face duplex structure just like the D/F combination of ball bearing, excellent at auto-adjusting and error-absorbing.
g. Various specifications for easy design.
h. Easy to use due to high compatibility of rail and block.

Linear Motion Guide H Series, H...S Series

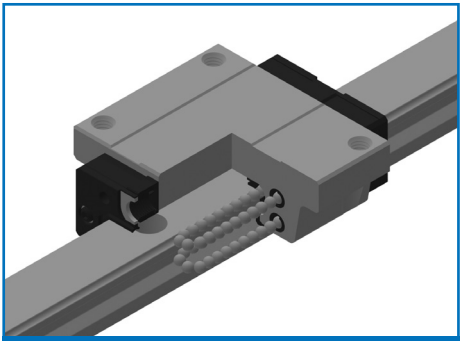

H Series (Full-ball Type)

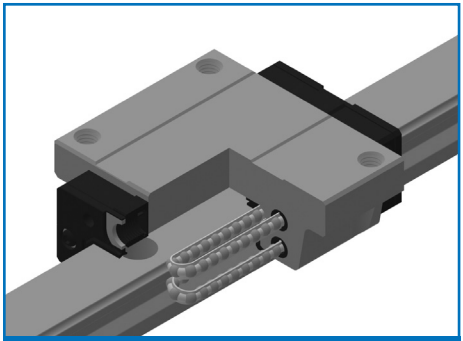

H...S Series (Spacer Chain Type)

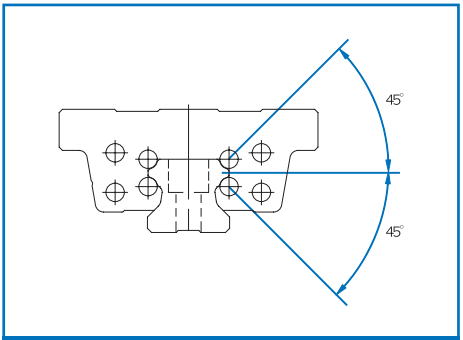

Cross Section

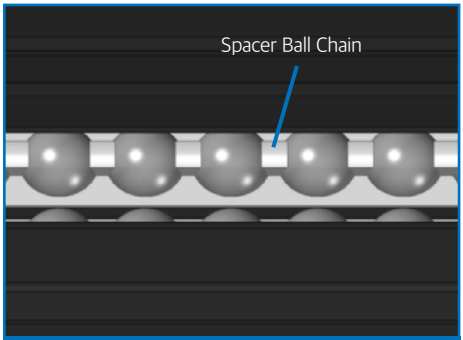

Details of Spacer of H...S Series

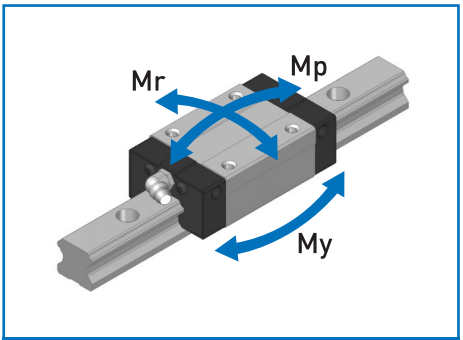

Moment Rigidity

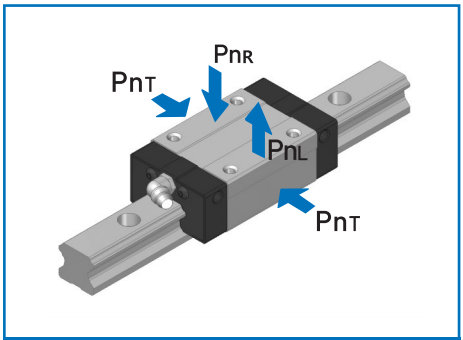

Radial Rigidity

Types and Features

Type	Shape & Feature	Type	Shape & Feature
H-FN H-FN...S	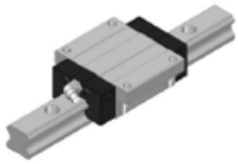 • A general type with tap-machined on the block flange and can be mounted in both up and down directions.	H-RN H-RN...S	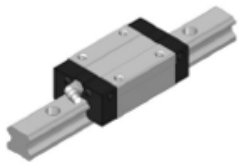 • A compact type with tap-machined on top and minimal block width(W).
H-FL H-FL...S	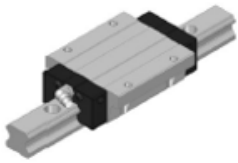 • The same cross section as in H-FN series; increased the rated load by lengthening the length(L1) of the block.	H-RL H-RL...S	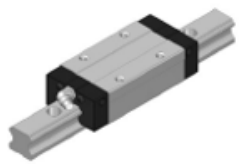 • The same cross section as in H-RN series; increased the rated load by lengthening the length(L1) of the block.
H-FNA H-FNA...S	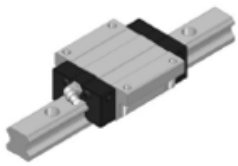 • A advantage type downward bolting by reducing the thickness of the flange over the H-FN series	• The model number with ...S is the spacer ball chain type	
H-FLA H-FLA...S	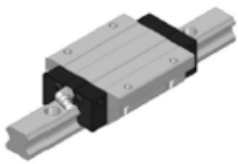 • The same cross section as in H-FNA series; increased the rated load by lengthening the length(L1) of the block		

Standard and maximum lengths of a rail

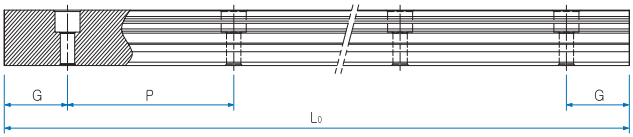

Unit : mm

Model No.	H15	H20	H25	H30	H35	H45	H55
Standard length	160	160	220	280	440	570	780
	220	220	280	360	520	675	900
	280	280	340	440	600	780	100
	⋮	340	400	520	680	885	⋮
	1360	⋮	460	600	760	⋮	2820
	1480	1960	⋮	⋮	⋮	2880	2940
	1600	2080	2200	2520	2680	2985	3060
		2200	2320	2680	2840	3090	
			2440	2840	3000		
				3000			
Standard pitch P	60	60	60	80	80	105	120
G	20	20	20	20	20	22.5	30
Max. length	4000						

Standard tap hole type of a rail

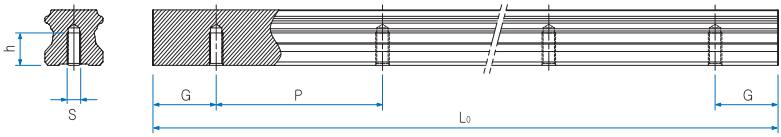

Model No.	S	h(mm)
H15	M5	8
H20	M6	10
H25	M6	12
H30	M8	15
H35	M8	17
H45	M12	24
H55	M14	24

H-FN Series, H-FL...S Series

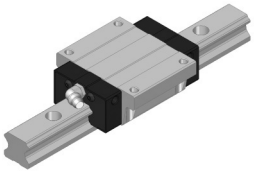

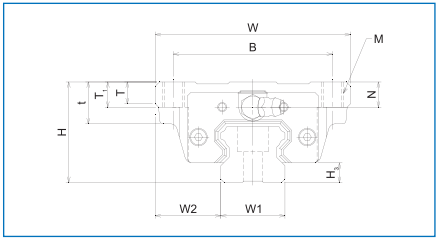

Model No.	External dimensions			Dimensions of block														H3
	Height H	Width W	Length L	B	C	M	L_1	t	T	T_1	N	E	f	e	D	Grease nipple		
H 15FN	24	47	56.5	38	30	M5	40.8	-	7	11	6	4.7	3.7	3.25	3.3	A-M5		4.5
H 15FL	24	47	64.8	38	30	M5	49.1	-	7	11	6	4.7	3.7	3.25	3.3	A-M5		4.5
H 20FN	30	63	73.2	53	40	M6	53.1	-	9.2	10	7.5	10.7	6.7	4.25	3.3	B-M6F		6.0
H 20FL	30	63	89.1	53	40	M6	69	-	9.2	10	7.5	10.7	6.7	4.25	3.3	B-M6F		6.0
H 25FN	36	70	83.2	57	45	M8	58.3	-	11.5	16	9	10.2	8	5	3.3	B-M6F		7.0
H 25FL	36	70	103.1	57	45	M8	78.2	-	11.5	16	9	10.2	8	5	3.3	B-M6F		7.0
H 30FN	42	90	99.3	72	52	M10	70.8	-	9.5	18	7.3	9.8	5	5.8	5.2	B-M6F		7.5
H 30FL	42	90	121.5	72	52	M10	93	-	9.5	18	7.3	9.8	5	5.8	5.2	B-M6F		7.5
H 35FN	48	100	111.8	82	62	M10	80.8	-	12.5	21	8	9.7	6.5	6.5	5.2	B-M6F		9.0
H 35FL	48	100	137.2	82	62	M10	106.2	-	12.5	21	8	9.7	6.5	6.5	5.2	B-M6F		9.0
H 45FN	60	120	139.0	100	80	M12	101.9	25	13	15	10	16	8	8	3.3	B-PT1/8		10.0
H 45FL	60	120	170.8	100	80	M12	133.7	25	13	15	10	16	8	8	3.3	B-PT1/8		10.0
H 55FN	70	140	163.0	116	95	M14	117.5	29	19	17	11	16	8	9	3.3	B-PT1/8		13.0
H 55FL	70	140	201.1	116	95	M14	155.6	29	19	17	11	16	8	9	3.3	B-PT1/8		13.0

Composition of Model Name & Number

H35		FN		SS	2	G_2		–	1000L		20/20		P		–	2
1	2	3	4	5	6	7	8		9	10	11	12	13	14		15

1 Model No. of Linear Motion Guide
2 Material of block : No symbol-Standard material / M-Stainless
3 Type of block : RN-Rectangular standard type / RL-Rectangular long type/ FN-Flange standard type / FL-Flange long type
4 No symbol-Standard block / E-Special block specification
5 Type of seal : No symbol-No seal / UU-End seal / SS-End seal+Side seal+Inner seal / DD-Double seal+Side seal+Inner seal / ZZ-End seal+Side seal+Inner seal+Metal scraper / KK-Double seal+Side seal+Inner seal+Metal scraper / UULF-End seal+LF seal / SSLF-End seal+Side seal+Inner seal+LF seal / DDLF-Double seal+Side seal+Inner seal+LF seal / ZZLF-End seal+Side seal+Inner seal+Metal scraper+LF seal / KKLF-Double seal+Side seal+Inner seal+Metal scraper+LF seal (*1)
6 Number of blocks assembled in one shaft
7 Symbol of clearance : No symbol-Normal preload / G_1-Light preload / G_2-Heavy preload / Gs-Special preload (*2)
8 Material of end plate : No symbol - Standard material / I - Stainless / N - Aluminum
9 Length of rail
10 Material of rail : No symbol-Standard material / M-Stainless
11 Size of G value: standard G value has no symbol
12 No symbol-Rail counterbore type (top assembly) / A-Rail tap hole type (bottom assembly) (*3)
13 Symbol of precision : No symbol-Moderate / H-High / P-Precision / SP-Super precision / UP-Ultra precision (*4)
14 No symbol-Standard rail / E-special rail specification
15 Number of axes used in the same plane

(*1) See Symbol List of Optional Parts at page 101. (*2) See Radial Clearance at page 18.
(*3) See Standard Tap Hole Type of Rail at page 49. (*4) See Selection of Precision Class at page 20.

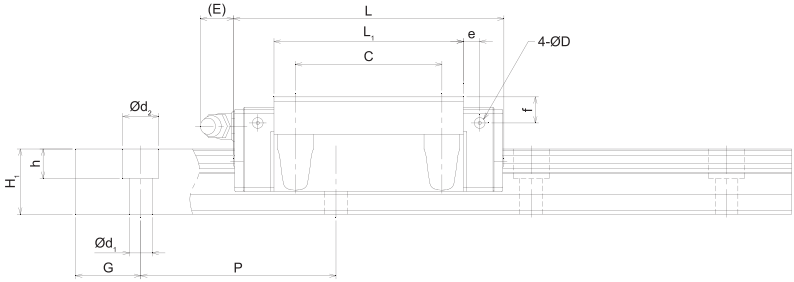

Unit : mm

Dimensions of rail						Basic load rating		Static allowance moment kN·m					Mass	
Width W1 ±0.05	W2	Height H1	G	Pitch P	d1 x d2 x h	C kN	Co kN	Mp		My		Mr	Block kg	Rail kg/m
								1 block	Double blocks	1 block	Double blocks	1 block		
15	16	13	20	60	4.5x7.5x5.3	12.6	16.2	0.115	0.552	0.115	0.552	0.129	0.19	1.3
15	16	13	20	60	4.5x7.5x5.3	14.3	19.3	0.165	0.769	0.165	0.769	0.154	0.24	1.3
20	21.5	16.5	20	60	6x9.5x8.5	18.3	23.9	0.221	1.049	0.221	1.049	0.251	0.41	2.2
20	21.5	16.5	20	60	6x9.5x8.5	21.8	30.7	0.370	1.692	0.370	1.692	0.322	0.54	2.2
23	23.5	20	20	60	7x11x9	27.0	33.1	0.337	1.636	0.337	1.636	0.398	0.61	3.0
23	23.5	20	20	60	7x11x9	32.8	43.6	0.596	2.760	0.596	2.760	0.525	0.82	3.0
28	31	26	20	80	9x14x12	50.4	57.1	0.711	3.384	0.711	3.384	0.828	1.1	4.85
28	31	26	20	80	9x14x12	60.3	73.6	1.203	5.506	1.203	5.506	1.067	1.3	4.85
34	33	29	20	80	9x14x12	67.0	74.6	1.062	5.012	1.062	5.012	1.298	1.6	6.58
34	33	29	20	80	9x14x12	80.2	96.2	1.797	8.172	1.797	8.172	1.674	2.01	6.58
45	37.5	38	22.5	105	14x20x17	108.5	116.4	2.860	9.912	2.860	9.912	2.275	2.83	11.03
45	37.5	38	22.5	105	14x20x17	129.7	150.1	4.533	16.161	4.533	16.161	2.935	3.70	11.03
53	43.5	44	30	120	16x23x20	155.9	161.5	4.654	16.016	4.654	16.016	3.779	4.36	15.26
53	43.5	44	30	120	16x23x20	187.5	210.1	7.468	26.493	7.468	26.493	4.916	5.76	15.26

1N≒0.102kgf

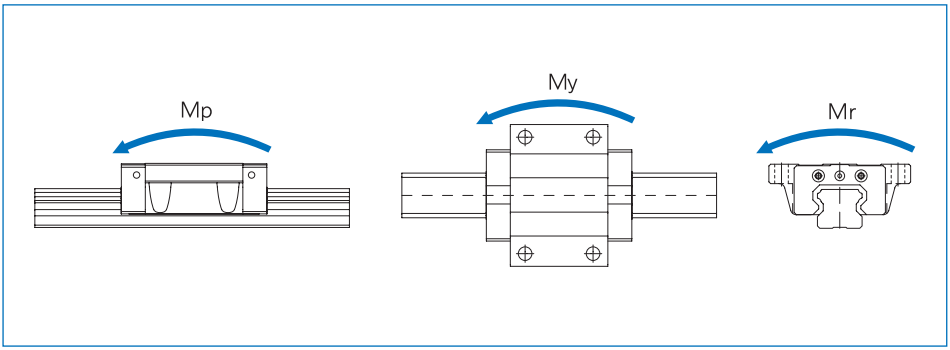

H-FNASeries, H-FLA Series

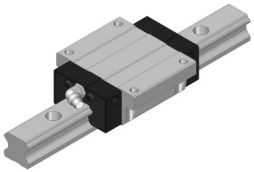

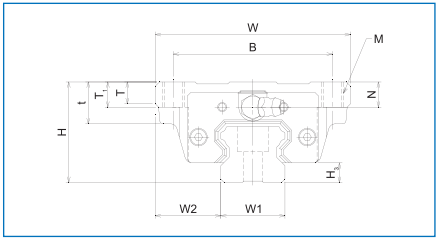

Model No.	External dimensions			Dimensions of block														H3
	Height H	Width W	Length L	B	C	M	L1	t	T	T1	N	E	f	e	D	Grease nipple		
H 15FNA	24	47	56.5	38	30	M5	40.8	-	7	7	6	4.7	3.7	3.25	3.3	A-M5		4.5
H 15FLA	24	47	64.8	38	30	M5	49.1	-	7	7	6	4.7	3.7	3.25	3.3	A-M5		4.5
H 25FNA	36	70	83.2	57	45	M8	58.3	-	11.5	10	9	10.2	8	5	3.3	B-M6F		7.0
H 25FLA	36	70	103.1	57	45	M8	78.2	-	11.5	10	9	10.2	8	5	3.3	B-M6F		7.0
H 30FNA	42	90	99.3	72	52	M10	70.8	-	9.5	10	7.3	9.8	5	5.8	5.2	B-M6F		7.5
H 30FLA	42	90	121.5	72	52	M10	93	-	9.5	10	7.3	9.8	5	5.8	5.2	B-M6F		7.5
H 35FNA	48	100	111.8	82	62	M10	80.8	-	12.5	13	8	9.7	6.5	6.5	5.2	B-M6F		9.0
H 35FLA	48	100	137.2	82	62	M10	106.2	-	12.5	13	8	9.7	6.5	6.5	5.2	B-M6F		9.0

Composition of Model Name & Number

H35		FNA		SS	2	G2		–	1000L		20/20		P		–	2
1	2	3	4	5	6	7	8		9	10	11	12	13	14		15

1 Model No. of Linear Motion Guide
2 Material of block
3 Type of block
4 No symbol-Standard block / E-Special block specification
5 Type of seal : No symbol-No seal / UU-End seal / SS-End seal+Side seal+Inner seal / DD-Double seal+Side seal+Inner seal / ZZ-End seal+Side seal+Inner seal+Metal scraper / KK-Double seal+Side seal+Inner seal+Metal scraper / UULF-End seal+LF seal / SSLF-End seal+Side seal+Inner seal+LF seal / DDLF-Double seal+Side seal+Inner seal+LF seal / ZZLF-End seal+Side seal+Inner seal+Metal scraper+LF seal / KKLF-Double seal+Side seal+Inner seal+Metal scraper+LF seal (*1)
6 Number of blocks assembled in one shaft
7 Symbol of clearance : No symbol-Normal preload / G1-Light preload / G2-Heavy preload / Gs-Special preload (*2)
8 Material of end plate : No symbol - Standard material / I - Stainless / N - Aluminum
9 Length of rail
10 Material of rail : No symbol-Standard material / M-Stainless
11 Size of G value: standard G value has no symbol
12 No symbol-Rail counterbore type (top assembly) / A-Rail tap hole type (bottom assembly) (*3)
13 Symbol of precision : No symbol-Moderate / H-High / P-Precision / SP-Super precision / UP-Ultra precision (*4)
14 No symbol-Standard rail / E-special rail specification
15 Number of axes used in the same plane

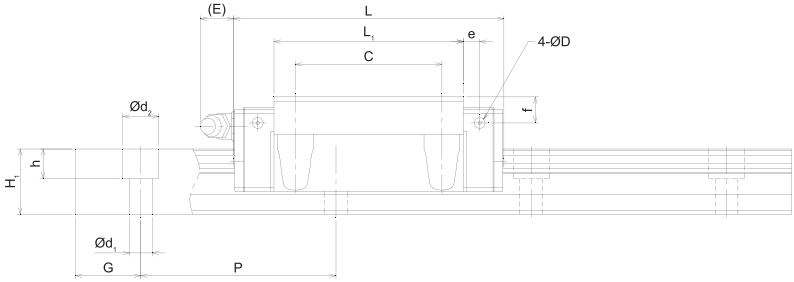

Unit : mm

Dimensions of rail						Basic load rating		Static allowance moment kN·m					Mass	
Width W1 ±0.05	W2	Height H1	G	Pitch P	d1 X d2 X h	C kN	Co kN	Mp 1 block	Mp Double blocks	My 1 block	My Double blocks	Mr 1 block	Block kg	Rail kg/m
15	16	13	20	60	4.5x7.5x5.3	12.6	16.2	0.115	0.552	0.115	0.552	0.129	0.19	1.3
15	16	13	20	60	4.5x7.5x5.3	14.3	19.3	0.165	0.769	0.165	0.769	0.154	0.24	1.3
23	23.5	20	20	60	7x11x9	27.0	33.1	0.337	1.636	0.337	1.636	0.398	0.61	3.0
23	23.5	20	20	60	7x11x9	32.8	43.6	0.596	2.760	0.596	2.760	0.525	0.82	3.0
28	31	26	20	80	9x14x12	50.4	57.1	0.711	3.384	0.711	3.384	0.828	1.1	4.85
28	31	26	20	80	9x14x12	60.3	73.6	1.203	5.506	1.203	5.506	1.067	1.3	4.85
34	33	29	20	80	9x14x12	67.0	74.6	1.062	5.012	1.062	5.012	1.298	1.6	6.58
34	33	29	20	80	9x14x12	80.2	96.2	1.797	8.172	1.797	8.172	1.674	2.01	6.58

1N≒0.102kgf

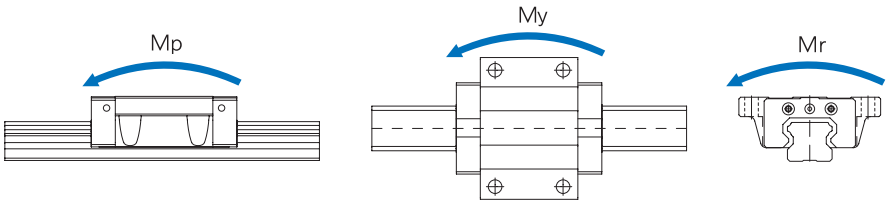

H-RN Series, H-RL Series

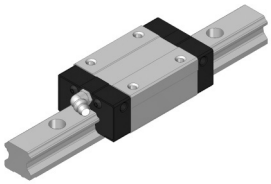

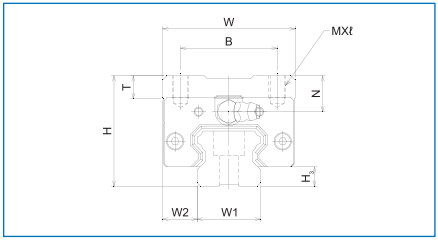

Model No.	External dimensions			Dimensions of block												
	Height H	Width W	Length L	B	C	M×ℓ	L_1	T	N	E	f	e	D	Grease nipple	H_3
H15RN	28	34	56.5	26	26	M4 x 5	40.8	6	10	4.7	7.7	3.25	3.3	A-M5	4.5
H15RL	28	34	64.8	26	26	M4 x 5	49.1	6	10	4.7	7.7	3.25	3.3	A-M5	4.5
H20RN	30	44	73.2	32	36	M5 x 6	53.1	8	7.5	10.7	6.7	4.25	3.3	B-M6F	6.0
H20RL	30	44	89.1	32	50	M5 x 6	69	8	7.5	10.7	6.7	4.25	3.3	B-M6F	6.0
H25RN	40	48	83.2	35	35	M6 x 8	58.3	8	13	10.2	12	5	3.3	B-M6F	7.0
H25RL	40	48	103.1	35	50	M6 x 8	78.2	8	13	10.2	12	5	3.3	B-M6F	7.0
H30RN	45	60	99.3	40	40	M8 x 10	70.8	8	10.3	9.8	8	5.8	5.2	B-M6F	7.5
H30RL	45	60	121.5	40	60	M8 x 10	93	8	10.3	9.8	8	5.8	5.2	B-M6F	7.5
H35RN	55	70	111.8	50	50	M8 x 12	80.8	10	15	9.7	13.5	6.5	5.2	B-M6F	9.0
H35RL	55	70	137.2	50	72	M8 x 12	106.2	10	15	9.7	13.5	6.5	5.2	B-M6F	9.0
H45RN	70	86	139.0	60	60	M10 x 17	101.9	15	20	16	18	8	3.3	B-PT1/8	10.0
H45RL	70	86	170.8	60	80	M10 x 17	133.7	15	20	16	18	8	3.3	B-PT1/8	10.0
H55RN	80	100	163.0	75	75	M12 x 18	117.5	18	21	16	18	9	3.3	B-PT1/8	13.0
H55RL	80	100	201.1	75	95	M12 x 18	155.6	18	21	16	18	9	3.3	B-PT1/8	13.0

Composition of Model Name & Number

H35		RN		SS	2	G_2		–	1000L		20/20		P		–	2
1	2	3	4	5	6	7	8		9	10	11	12	13	14		15

1 Model No. of Linear Motion Guide
2 Material of block : No symbol-Standard material / M-Stainless
3 Type of block : RN-Rectangular standard type / RL-Rectangular long type/ FN-Flange standard type / FL-Flange long type
4 No symbol-Standard block / E-Special block specification
5 Type of seal : No symbol-No seal / UU-End seal / SS-End seal+Side seal+Inner seal / DD-Double seal+Side seal+Inner seal / ZZ-End seal+Side seal+Inner seal+Metal scraper / KK-Double seal+Side seal+Inner seal+Metal scraper / UULF-End seal+LF seal / SSLF-End seal+Side seal+Inner seal+LF seal / DDLF-Double seal+Side seal+Inner seal+LF seal / ZZLF-End seal+Side seal+Inner seal+Metal scraper+LF seal / KKLF-Double seal+Side seal+Inner seal+Metal scraper+LF seal (*1)
6 Number of blocks assembled in one shaft
7 Symbol of clearance : No symbol-Normal preload / G_1-Light preload / G_2-Heavy preload / Gs-Special preload (*2)
8 Material of end plate : No symbol - Standard material / I - Stainless / N - Aluminum
9 Length of rail
10 Material of rail : No symbol-Standard material / M-Stainless
11 Size of G value: standard G value has no symbol
12 No symbol-Rail counterbore type (top assembly) / A-Rail tap hole type (bottom assembly) (*3)
13 Symbol of precision : No symbol-Moderate / H-High / P-Precision / SP-Super precision / UP-Ultra precision (*4)
14 No symbol-Standard rail / E-special rail specification
15 Number of axes used in the same plane

(*1) See Symbol List of Optional Parts at page 101. (*2) See Radial Clearance at page 18.
(*3) See Standard Tap Hole Type of Rail at page 49. (*4) See Selection of Precision Class at page 20.

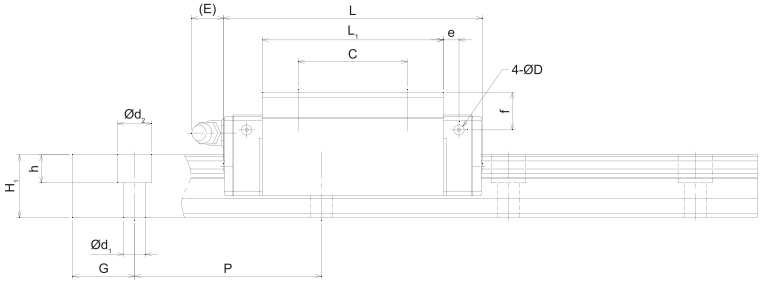

Unit : mm

Dimensions of rail						Basic load rating		Static allowance moment kN·m					Mass	
Width W1 ±0.05	W2	Height H1	G	Pitch P	d1 x d2 x h	C kN	Co kN	Mp		My		Mr	Block kg	Rail kg/m
								1 block	Double blocks	1 block	Double blocks	1 block		
15	9.5	13	20	60	4.5x7.5x5.3	12.6	16.2	0.115	0.552	0.115	0.552	0.129	0.18	1.3
15	9.5	13	20	60	4.5xx7.5x5.3	14.3	19.3	0.165	0.769	0.165	0.769	0.154	0.23	1.3
20	12	16.5	20	60	6x9.5x8.5	18.3	23.9	0.221	1.049	0.221	1.049	0.251	0.31	2.2
20	12	16.5	20	60	6x9.5x8.5	21.8	30.7	0.370	1.692	0.370	1.692	0.322	0.41	2.2
23	12.5	20	20	60	7x11x9	27.0	33.1	0.337	1.636	0.337	1.636	0.398	0.53	3.0
23	12.5	20	20	60	7x11x9	32.8	43.6	0.596	2.760	0.596	2.760	0.525	0.71	3.0
28	16	26	20	80	9x14x12	50.4	57.1	0.711	3.384	0.711	3.384	0.828	0.9	4.85
28	16	26	20	80	9x14x12	60.3	73.6	1.203	5.506	1.203	5.506	1.067	1.1	4.85
34	18	29	20	80	9x14x12	67.0	74.6	1.062	5.012	1.062	5.012	1.298	1.5	6.58
34	18	29	20	80	9x14x12	80.2	96.2	1.797	8.172	1.797	8.172	1.674	2.01	6.58
45	20.5	38	22.5	105	14x20x17	108.5	116.4	2.860	9.912	2.860	9.912	2.275	2.89	11.03
45	20.5	38	22.5	105	14x20x17	129.7	150.1	4.533	16.161	4.533	16.161	2.935	3.74	11.03
53	23.5	44	30	120	16x23x20	155.9	161.5	4.654	16.016	4.654	16.016	3.779	4.28	15.26
53	23.5	44	30	120	16x23x20	187.5	210.1	7.468	26.493	7.468	26.493	4.916	5.59	15.26

1N≒0.102kgf

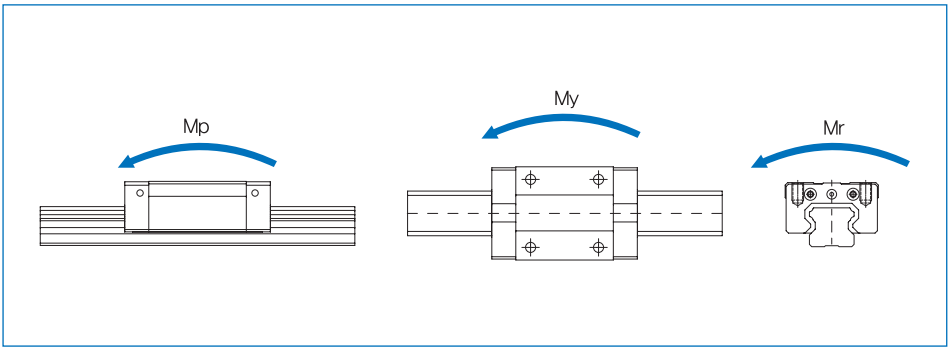

H-FN...S Series, H-FL...S Series

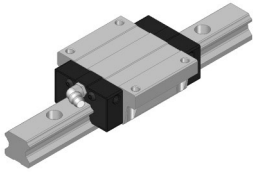

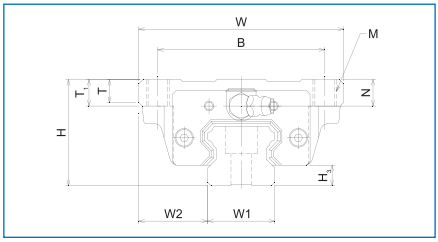

Model No.	External dimensions			Dimensions of block													H3
	Height H	Width W	Length L	B	C	M	L_1	T	T_1	N	E	f	e	D	Grease nipple		
H15FN...S	24	47	56.5	38	30	M5	40.8	7	11	6.0	4.7	3.7	3.25	3.3	A-M5		4.5
H15FL...S	24	47	64.8	38	30	M5	49.1	7	11	6.0	4.7	3.7	3.25	3.3	A-M5		4.5
H20FN...S	30	63	73.2	53	40	M6	53.1	9.2	10	7.5	10.7	6.7	4.25	3.3	B-M6F		6.0
H20FL...S	30	63	89.1	53	40	M6	69.0	9.2	10	7.5	10.7	6.7	4.25	3.3	B-M6F		6.0
H25FN...S	36	70	83.2	57	45	M8	58.3	11.5	16	9.0	10.2	8	5	3.3	B-M6F		7.0
H25FL...S	36	70	103.1	57	45	M8	78.2	11.5	16	9.0	10.2	8	5	3.3	B-M6F		7.0
H30FN...S	42	90	99.3	72	52	M10	70.8	9.5	18	7.3	9.8	5	5.8	5.2	B-M6F		7.5
H30FL...S	42	90	121.5	72	52	M10	93.0	9.5	18	7.3	9.8	5	5.8	5.2	B-M6F		7.5
H35FN...S	48	100	111.8	82	62	M10	80.8	12.5	21	8.0	9.7	6.5	6.5	5.2	B-M6F		9.0
H35FL...S	48	100	137.2	82	62	M10	106.2	12.5	21	8.0	9.7	6.5	6.5	5.2	B-M6F		9.0

Composition of Model Name & Number

H35		FN		SS	2	S	G_2		–	1000L		20/20		P		–	2
1	2	3	4	5	6	7	8	9		10	11	12	13	14	15		16

1 Model No.
2 Material of block : No symbol-Standard material / M-Stainless
3 Type of block : RN-Rectangular standard type / RL-Rectangular long type/ FN-Flange standard type / FL-Flange long type
4 No symbol-Standard block / E-Special block specification
5 Type of seal : No symbol-No seal / UU-End seal / SS-End seal+Side seal+Inner seal / DD-Double seal+Side seal+Inner seal / ZZ-End seal+Side seal+Inner seal+Metal scraper / KK-Double seal+Side seal+Inner seal+Metal scraper / UULF-End seal+LF seal / SSLF-End seal+Side seal+Inner seal+LF seal / DDLF-Double seal+Side seal+Inner seal+LFseal / ZZLF-End seal+Side seal+Inner seal+Metal scraper+LF seal / KKLF-Double seal+Side seal+Inner seal+Metal scraper+LF seal (*1)
6 Number of blocks assembled in one shaft
7 S-Spacer chain type
8 Symbol of clearance : No symbol-Normal preload / G_1-Light preload / G_2-Heavy preload / Gs-Special preload (*2)
9 Material of end plate : No symbol - Standard material / I - Stainless / N - Aluminum
10 Length of rail
11 Material of rail : No symbol-Standard material / M-Stainless
12 Size of G value: standard G value has no symbol
13 No symbol-Rail counterbore type (top assembly) / A-Rail tap hole type (bottom assembly) (*3)
14 Symbol of precision : No symbol-Moderate / H-High / P-Precision / SP-Super precision / UP-Ultra precision (*4)
15 No symbol-Standard rail / E-special rail specification
16 Number of axes used in the same plane

(*1) See Symbol List of Optional Parts at page 101. (*2) See Radial Clearance at page 18.
(*3) See Standard Tap Hole Type of Rail at page 49. (*4) See Selection of Precision Class at page 20.

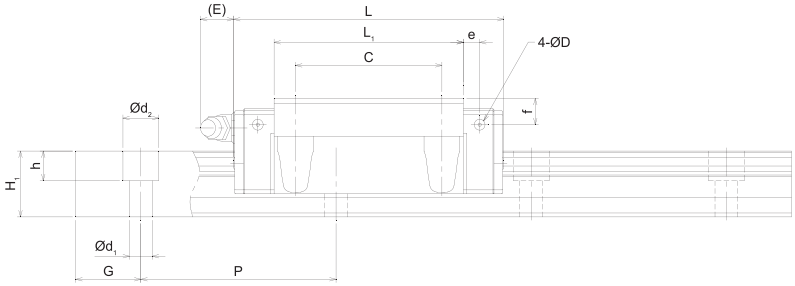

Unit : mm

Dimensions of rail						Basic load rating		Static allowance moment kN · m					Mass	
Width W1 ±0.05	W2	Height H1	G	Pitch P	d1xd2xh	C kN	Co kN	Mp		My		Mr	Block kg	Rail kg/m
								1 block	Double blocks	1 block	Double blocks	1 block		
15	16	13	20	60	4.5x7.5x5.3	12.1	16.2	0.115	0.552	0.115	0.552	0.129	0.19	1.3
15	16	13	20	60	4.5x7.5x5.3	13.7	19.3	0.165	0.769	0.165	0.769	0.154	0.24	1.3
20	21.5	16.5	20	60	6x9.5x8.5	17.6	23.9	0.221	1.049	0.221	1.049	0.251	0.41	2.2
20	21.5	16.5	20	60	6x9.5x8.5	21.1	30.7	0.370	1.692	0.370	1.692	0.322	0.54	2.2
23	23.5	20	20	60	7x11x9	25.8	33.1	0.337	1.636	0.337	1.636	0.398	0.61	3.0
23	23.5	20	20	60	7x11x9	31.7	43.6	0.596	2.760	0.596	2.760	0.525	0.82	3.0
28	31	26	20	80	9x14x12	48	57.1	0.711	3.384	0.711	3.384	0.828	1.1	4.85
28	31	26	20	80	9x14x12	58	73.6	1.203	5.506	1.203	5.506	1.067	1.3	4.85
34	33	29	20	80	9x14x12	63.7	74.6	1.062	5.012	1.062	5.012	1.298	1.6	6.58
34	33	29	20	80	9x14x12	77.1	96.2	1.797	8.172	1.797	8.172	1.674	2.01	6.58

1N≒0.102kgf

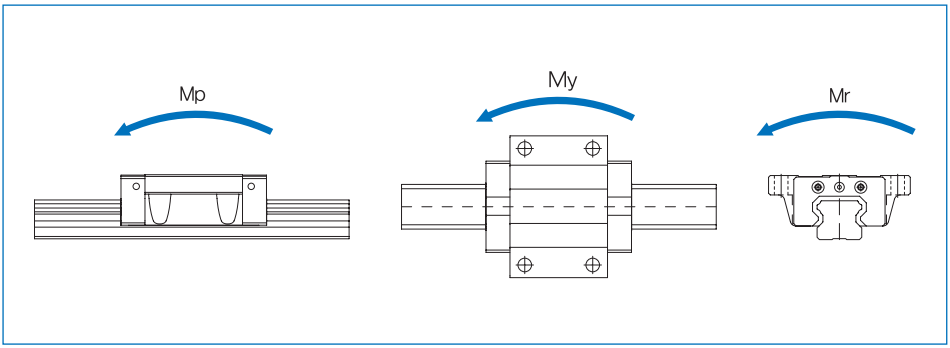

H-FNA...S Series, H-FLA...S Series

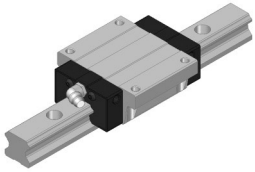

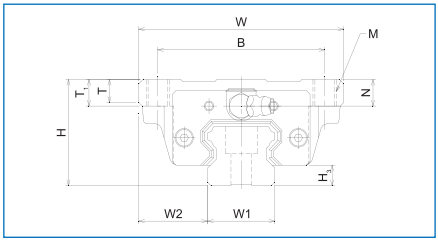

Model No.	External dimensions			Dimensions of block												H3
	Height H	Width W	Length L	B	C	M	L_1	T	T_1	N	E	f	e	D	Grease nipple	
H15FNA...S	24	47	56.5	38	30	M5	40.8	7	7	6.0	4.7	3.7	3.25	3.3	A-M5	4.5
H15FLA...S	24	47	64.8	38	30	M5	49.1	7	7	6.0	4.7	3.7	3.25	3.3	A-M5	4.5
H25FNA...S	36	70	83.2	57	45	M8	58.3	11.5	10	9.0	10.2	8	5	3.3	B-M6F	7.0
H25FLA...S	36	70	103.1	57	45	M8	78.2	11.5	10	9.0	10.2	8	5	3.3	B-M6F	7.0
H30FNA...S	42	90	99.3	72	52	M10	70.8	9.5	10	7.3	9.8	5	5.8	5.2	B-M6F	7.5
H30FLA...S	42	90	121.5	72	52	M10	93.0	9.5	10	7.3	9.8	5	5.8	5.2	B-M6F	7.5
H35FNA...S	48	100	111.8	82	62	M10	80.8	12.5	13	8.0	9.7	6.5	6.5	5.2	B-M6F	9.0
H35FLA...S	48	100	137.2	82	62	M10	106.2	12.5	13	8.0	9.7	6.5	6.5	5.2	B-M6F	9.0

Composition of Model Name & Number

H35		FNA		SS	2	S	G_2		–	1000L		20/20		P		–	2
1	2	3	4	5	6	7	8	9		10	11	12	13	14	15		16

1 Model No.
2 Material of block
3 Type of block
4 No symbol-Standard block / E-Special block specification
5 Type of seal : No symbol-No seal / UU-End seal / SS-End seal+Side seal+Inner seal / DD-Double seal+Side seal+Inner seal / ZZ-End seal+Side seal+Inner seal+Metal scraper / KK-Double seal+Side seal+Inner seal+Metal scraper / UULF-End seal+LF seal / SSLF-End seal+Side seal+Inner seal+LF seal / DDLF-Double seal+Side seal+Inner seal+LFseal / ZZLF-End seal+Side seal+Inner seal+Metal scraper+LF seal / KKLF-Double seal+Side seal+Inner seal+Metal scraper+LF seal (*1)
6 Number of blocks assembled in one shaft
7 S-Spacer chain type
8 Symbol of clearance : No symbol-Normal preload / G_1-Light preload / G_2-Heavy preload / G_s-Special preload (*2)
9 Material of end plate : No symbol - Standard material / I - Stainless / N - Aluminum
10 Length of rail
11 Material of rail : No symbol-Standard material / M-Stainless
12 Size of G value: standard G value has no symbol
13 No symbol-Rail counterbore type (top assembly) / A-Rail tap hole type (bottom assembly) (*3)
14 Symbol of precision : No symbol-Moderate / H-High / P-Precision / SP-Super precision / UP-Ultra precision (*4)
15 No symbol-Standard rail / E-special rail specification
16 Number of axes used in the same plane

(*1) See Symbol List of Optional Parts at page 101. (*2) See Radial Clearance at page 18.
(*3) See Standard Tap Hole Type of Rail at page 49. (*4) See Selection of Precision Class at page 20.

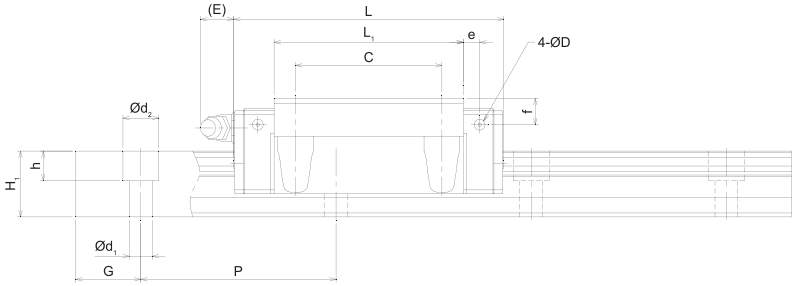

Unit : mm

Dimensions of rail						Basic load rating		Static allowance moment kN·m					Mass	
Width W1 ±0.05	W2	Height H1	G	Pitch P	d1xd2xh	C kN	Co kN	Mp 1 block	Mp Double blocks	My 1 block	My Double blocks	Mr 1 block	Block kg	Rail kg/m
15	16	13	20	60	4.5x7.5x5.3	12.1	16.2	0.115	0.552	0.115	0.552	0.129	0.19	1.3
15	16	13	20	60	4.5x7.5x5.3	13.7	19.3	0.165	0.769	0.165	0.769	0.154	0.24	1.3
23	23.5	20	20	60	7x11x9	25.8	33.1	0.337	1.636	0.337	1.636	0.398	0.61	3.0
23	23.5	20	20	60	7x11x9	31.7	43.6	0.596	2.760	0.596	2.760	0.525	0.82	3.0
28	31	26	20	80	9x14x12	48	57.1	0.711	3.384	0.711	3.384	0.828	1.1	4.85
28	31	26	20	80	9x14x12	58	73.6	1.203	5.506	1.203	5.506	1.067	1.3	4.85
34	33	29	20	80	9x14x12	63.7	74.6	1.062	5.012	1.062	5.012	1.298	1.6	6.58
34	33	29	20	80	9x14x12	77.1	96.2	1.797	8.172	1.797	8.172	1.674	2.01	6.58

1N≒0.102kgf

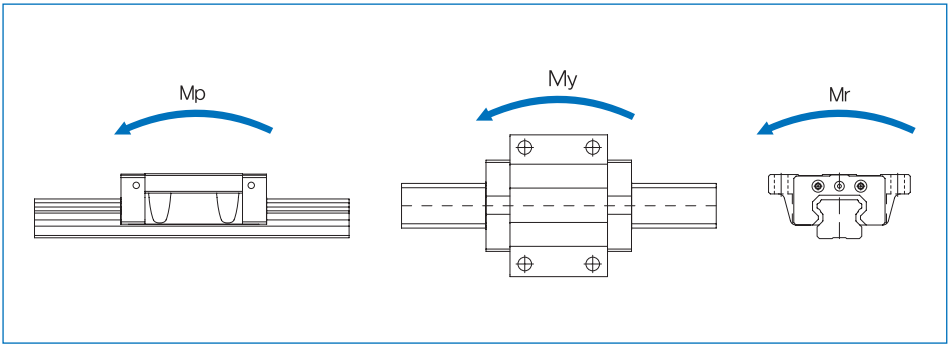

H-RN...S Series, H-RL...S Series

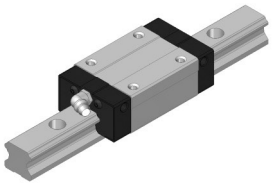

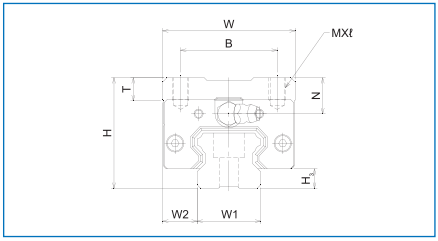

Model No.	External dimensions			Dimensions of block											H3
	Height H	Width W	Length L	B	C	M x ℓ	L1	T	N	E	f	e	D	Grease nipple	
H 15RN...S	28	34	56.5	26	26	M4 x 5	40.8	6	10	4.7	7.7	3.25	3.3	A-M5	4.5
H 15RL...S	28	34	64.8	26	26	M4 x 5	49.1	6	10	4.7	7.7	3.25	3.3	A-M5	4.5
H 20RN...S	30	44	73.2	32	36	M5 x 6	53.1	8	7.5	10.7	6.7	4.25	3.3	B-M6F	6.0
H 20RL...S	30	44	89.1	32	50	M5 x 6	69	8	7.5	10.7	6.7	4.25	3.3	B-M6F	6.0
H 25RN...S	40	48	83.2	35	35	M6 x 8	58.3	8	13	10.2	12	5	3.3	B-M6F	7.0
H 25RL...S	40	48	103.1	35	50	M6 x 8	78.2	8	13	10.2	12	5	3.3	B-M6F	7.0
H 30RN...S	45	60	99.3	40	40	M8 x 10	70.8	8	10.3	9.8	8	5.8	5.2	B-M6F	7.5
H 30RL...S	45	60	121.5	40	60	M8 x 10	93	8	10.3	9.8	8	5.8	5.2	B-M6F	7.5
H 35RN...S	55	70	111.8	50	50	M8 x 12	80.8	10	15	9.7	13.5	6.5	5.2	B-M6F	9.0
H 35RL...S	55	70	137.2	50	72	M8 x 12	106.2	10	15	9.7	13.5	6.5	5.2	B-M6F	9.0

Composition of Model Name & Number

H35		RN		SS	2	S	G2		–	1000L		20/20		P		–	2
1	2	3	4	5	6	7	8	9		10	11	12	13	14	15		16

1. Model No.
2. Material of block : No symbol-Standard material / M-Stainless
3. Type of block : RN-Rectangular standard type / RL-Rectangular long type/ FN-Flange standard type / FL-Flange long type
4. No symbol-Standard block / E-Special block specification
5. Type of seal : No symbol-No seal / UU-End seal / SS-End seal+Side seal+Inner seal / DD-Double seal+Side seal+Inner seal / ZZ-End seal+Side seal+Inner seal+Metal scraper / KK-Double seal+Side seal+Inner seal+Metal scraper / UULF-End seal+LF seal / SSLF-End seal+Side seal+Inner seal+LF seal / DDLF-Double seal+Side seal+Inner seal+LF seal / ZZLF-End seal+Side seal+Inner seal+Metal scraper+LF seal / KKLF-Double seal+Side seal+Inner seal+Metal scraper+LF seal (*1)
6. Number of blocks assembled in one shaft
7. S-Spacer chain type
8. Symbol of clearance : No symbol-Normal preload / G1-Light preload / G2-Heavy preload / Gs-Special preload (*2)
9. Material of end plate : No symbol - Standard material / I - Stainless / N - Aluminum
10. Length of rail
11. Material of rail : No symbol-Standard material / M-Stainless
12. Size of G value: standard G value has no symbol
13. No symbol-Rail counterbore type (top assembly) / A-Rail tap hole type (bottom assembly) (*3)
14. Symbol of precision : No symbol-Moderate / H-High / P-Precision / SP-Super precision / UP-Ultra precision (*4)
15. No symbol-Standard rail / E-special rail specification
16. Number of axes used in the same plane

(*1) See Symbol List of Optional Parts at page 101. (*2) See Radial Clearance at page 18.
(*3) See Standard Tap Hole Type of Rail at page 49. (*4) See Selection of Precision Class at page 20.

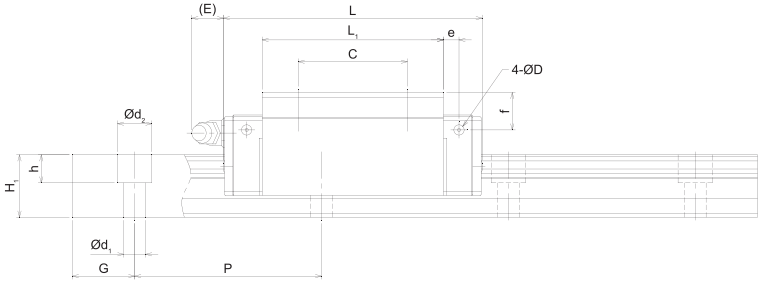

Unit : mm

Dimensions of rail						Basic load rating		Static allowance moment kN·m					Mass	
Width W1 ±0.05	W2	Height H1	G	Pitch P	d1xd2xh	C kN	Co kN	Mp		My		Mr	Block kg	Rail kg/m
								1 block	Double blocks	1 block	Double blocks	1 block		
15	9.5	13	20	60	4.5x7.5x5.3	12.1	16.2	0.115	0.552	0.115	0.552	0.129	0.18	1.3
15	9.5	13	20	60	4.5x7.5x5.3	13.7	19.3	0.165	0.769	0.165	0.769	0.154	0.23	1.3
20	12	16.5	20	60	6x9.5x8.5	17.6	23.9	0.221	1.049	0.221	1.049	0.251	0.31	2.2
20	12	16.5	20	60	6x9.5x8.5	21.1	30.7	0.370	1.692	0.370	1.692	0.322	0.41	2.2
23	12.5	20	20	60	7x11x9	25.8	33.1	0.337	1.636	0.337	1.636	0.398	0.53	3.0
23	12.5	20	20	60	7x11x9	31.7	43.6	0.596	2.760	0.596	2.760	0.525	0.71	3.0
28	16	26	20	80	9x14x12	48	57.1	0.711	3.384	0.711	3.384	0.828	0.9	4.85
28	16	26	20	80	9x14x12	58	73.6	1.203	5.506	1.203	5.506	1.067	1.1	4.85
34	18	29	20	80	9x14x12	63.7	74.6	1.062	5.012	1.062	5.012	1.298	1.5	6.58
34	18	29	20	80	9x14x12	77.1	96.2	1.797	8.172	1.797	8.172	1.674	2.01	6.58

1N≒0.102kgf

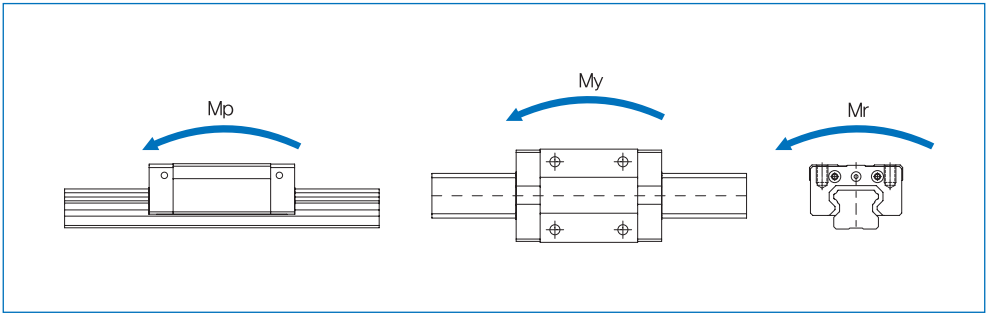

3. Wide Linear Motion Guide HB Series

1) Structure of HB Series

WON Wide Linear Motion Guide HB Series has a four-row circular arc-groove structure in the raceway groove of a rail or block. In addition, it has a 4-direction equal load type in which it can bear equal load rating for vertical compression load, tensile load, and horizontal load as its ball as a rolling element is combined at 45 degree. Therefore, the model reduces friction resistance and ensures smooth motion and long life. Since the model has a wide and short rail, moment works only with one shaft in a narrow space. It is applicable to place that requires high rigidity.

2) Features of HB Series

a. High quality, high precision, and elimination of labor.

b. High rigidity and high precision for implementing stable travel precision for a long time.

c. Excellent wear resistance and friction resistance that ensure a long life.

d. The face-to-face duplex structure just like the D/F combination of ball bearing, excellent at auto-adjusting and error-absorbing.

e. A higher quantity of balls than that of H Series; higher rigidity and wider rail; sufficient moment working only with one shaft

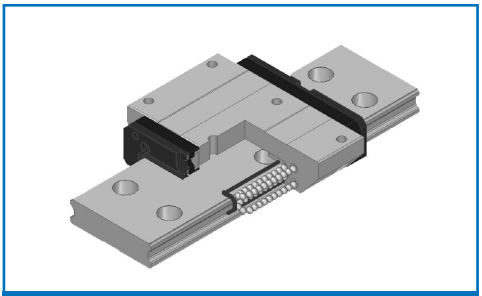

HB Series

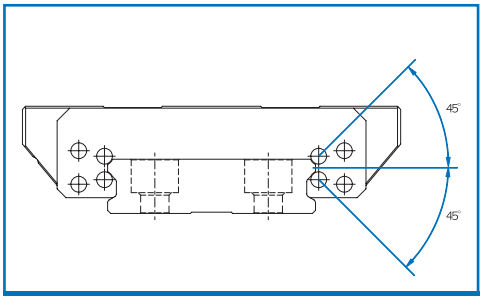

Cross Section

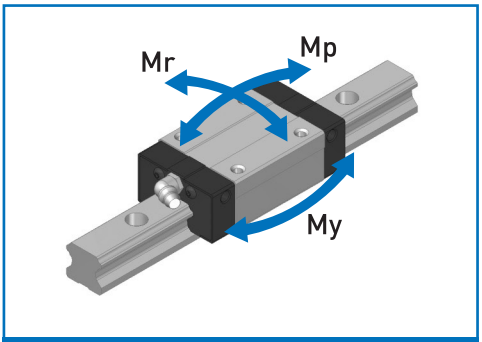

Moment Rigidity

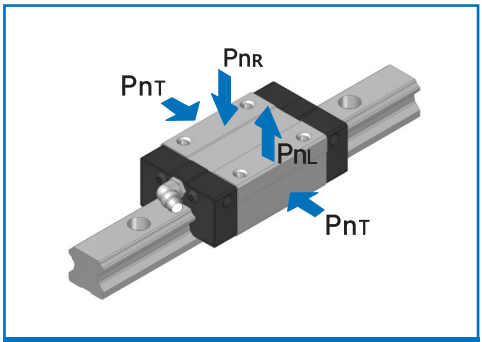

Radial Rigidity

Types and Features

Category	Type	Shape & Feature		
Flange type	HB-F	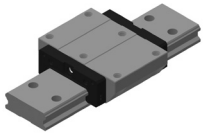	• A general type with the tap-proce ssed flange of a block, supporting installation from bottom to top and from top to bottom • 4-direction equal load type with high rigidity and high load	Electric spark machine Loader CNC lathe Industrial robot Semiconductor display manufacturing equipment Measuring equipmentWafer transfer equipment Construction equipment Railway vehicle
Compact type	HB-R	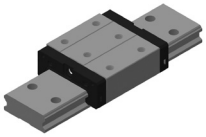	• A compact type with the tap-proc essed top of a block and without flange • 4-direction equal load type with high rigidity and high load	

Standard and maximum lengths of rail

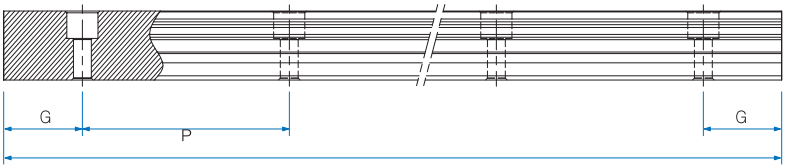

Unit : mm

Model No.	HB17	HB21	HB27	HB35
Standard length	110	130	160	280
	230	230	280	440
	350	380	400	680
	470	480	640	840
	550	530	880	1000
	⋮	⋮	⋮	⋮
	1990	1930	3820	3800
		1980	3880	3960
			3940	
Standard pitch P	40	50	60	80
G	15	15	20	20
Max. length	2000		4000	

HB-F Series

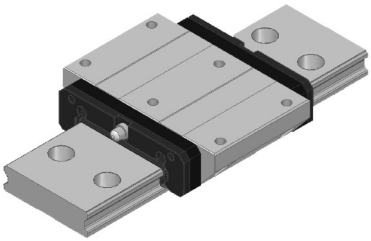

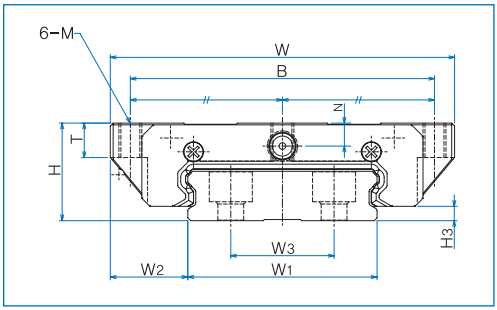

Model No.	External dimensions			Dimensions of block								H_3
	Height H	Width W	Length L	B	C	M	L_1	T	N	E	Grease nipple	
HB17F	17	60	51	53	26	M4	37.4	6	4	3.5	A-Ø3	2.5
HB21F	21	68	59	60	29	M5	45.4	8	5	3.5	A-Ø3	3.3
HB27F	27	80	72.5	70	40	M6	54.7	10	6	10.3	B-M6F	3.5
HB35F	35	120	105.3	107	60	M8	82.1	14	7.6	10.3	B-M6F	4

Composition of Model Name & Number

HB17	F		UU	2		G_2	—	1000L	20/20		P		—	2
1	2	3	4	5	6	7		8	9	10	11	12		13

1. Model No.
2. Type of block : F-Flange standard type / R-Rectangular standard type
3. No symbol-Standard block / E-Special block specification
4. Type of seal : No symbol-No seal / UU-End seal / SS-End seal+ Inside seal / ZZ-End seal+ Inside seal+ Metal scraper/ UULF -End seal+ LF seal / SSLF-End seal+ Inside seal+ LF seal / ZZLF-End seal+ Inside seal+ Metal scraper + LF seal (*1)
5. Number of blocks assembled in one shaft
6. No symbol-Full ball type
7. Symbol of clearance : No symbol-Normal preload / G_1-Light preload / G_2-Heavy preload / Gs-Special preload (*2)
8. Length of rail
9. Size of G value: standard G value has no symbol
10. No symbol-Rail counterbore type (top assembly)
11. Symbol of precision : No symbol-Moderate / H-High / P-Precision / SP-Super precision / UP-Ultra precision (*3)
12. No symbol-Standard rail / E-special rail specification
13. Number of axes used in the same plane

(*1) See Symbol List of Optional Parts at page 101. (*2) See Radial Clearance at page 18.
(*3) See Selection of Precision Class at page 20.

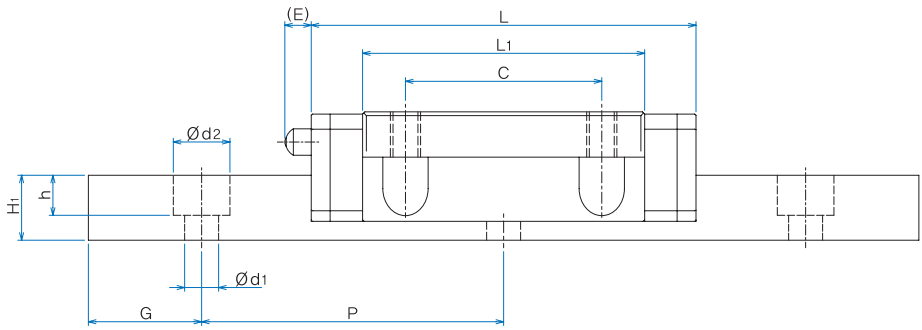

Unit : mm

Dimensions of rail							Basic load rating		Static allowance moment kN·m					Mass	
Width W_1 0 -0.05	W_2	W_3	Height H_1	G	Pitch P	$d_1 x d_2 x h$	C kN	Co kN	Mp		My		Mr	Block kg	Rail kg/m
									1 block	Double blocks	1 block	Double blocks	1 block		
33	13.5	18	8.6	15	40	4.5x7.5x5.3	7.3	12.2	0.081	0.381	0.081	0.381	0.205	0.15	1.9
37	15.5	22	11	15	50	4.5x7.5x5.3	8.4	14.8	0.119	0.547	0.119	0.547	0.278	0.24	2.9
42	19	24	15	20	60	4.5x7.5x5.3	15.3	24.8	0.239	1.114	0.239	1.114	0.527	0.47	4.5
69	25.5	40	19	20	80	7x11x9	33.9	53.2	0.773	3.528	0.773	3.528	1.851	1.40	9.6

1N≒0.102kgf

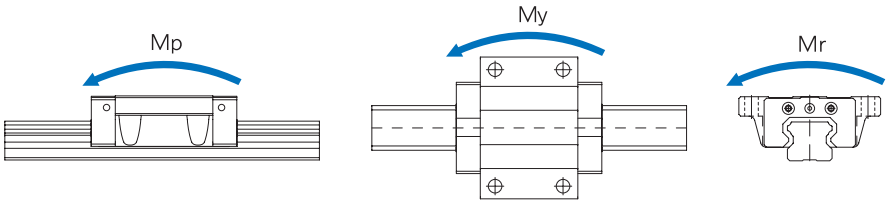

HB-R Series

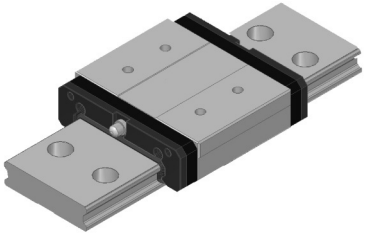

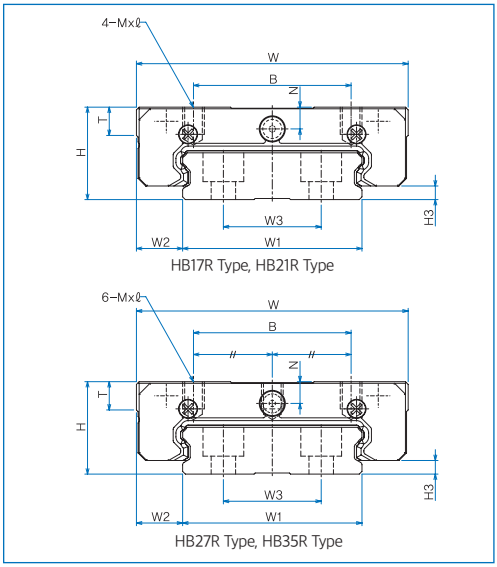

Model No.	External dimensions			Dimensions of block								H_3
	Height H	Width W	Length L	B	C	M X ℓ	L_1	T	N	E	Grease nipple	
HB17R	17	50	51	29	15	M4 X 5	37.4	5.2	4	3.5	A-Ø3	2.5
HB21R	21	54	59	31	19	M5 X 6	45.4	8	5	3.5	A-Ø3	3.3
HB27R	27	62	72.5	46	32	M6 X 6	54.7	10	6	10.3	B-M6F	3.5
HB35R	35	100	105.3	76	50	M8 X 8	82.1	14	7.6	10.3	B-M6F	4

Composition of Model Name & Number

HB17	R		UU	2		G_2	—	1000L	20/20		P		—	2
1	2	3	4	5	6	7		8	9	10	11	12		13

1 Model No.
2 Type of block : F-Flange standard type / R-Rectangular standard type
3 No symbol-Standard block / E-Special block specification
4 Type of seal : No symbol-No seal / UU-End seal / SS-End seal+ Inside seal / ZZ-End seal+ Inside seal+ Metal scraper / UULF -End seal+ LF seal / SSLF-End seal+ Inside seal+ LF seal / ZZLF-End seal+ Inside seal+ Metal scraper+ LF seal (*1)
5 Number of blocks assembled in one shaft
6 No symbol-Full ball type
7 Symbol of clearance : No symbol-Normal preload / G_1-Light preload / G_2-Heavy preload / Gs-Special preload (*2)
8 Length of rail
9 Size of G value: standard G value has no symbol
10 No symbol-Rail counterbore type (top assembly)
11 Symbol of precision : No symbol-Moderate / H-High / P-Precision / SP-Super precision / UP-Ultra precision (*3)
12 No symbol-Standard rail / E-special rail specification
13 Number of axes used in the same plane

(*1) See Symbol List of Optional Parts at page 101. (*2) See Radial Clearance at page 18.
(*3) See Selection of Precision Class at page 20.

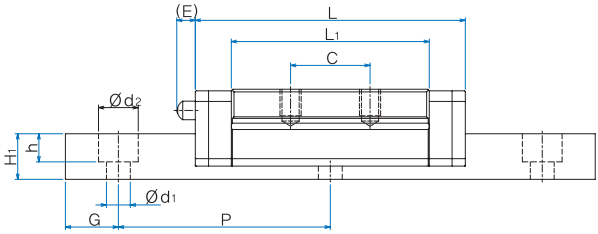

Unit : mm

Dimensions of rail							Basic load rating		Static allowance moment kN·m					Mass	
Width W_1 0 -0.05	W_2	W_3	Height H_1	G	Pitch P	$d_1 x d_2 x h$	C kN	Co kN	Mp		My		Mr	Block kg	Rail kg/m
									1 block	Double blocks	1 block	Double blocks	1 block		
33	8.5	18	8.6	15	40	4.5x7.5x5.3	7.3	12.2	0.081	0.381	0.081	0.381	0.205	0.13	1.9
37	8.5	22	11	15	50	4.5x7.5x5.3	8.4	14.8	0.119	0.547	0.119	0.547	0.278	0.19	2.9
42	10	24	15	20	60	4.5x7.5x5.3	15.3	24.8	0.239	1.114	0.239	1.114	0.527	0.36	4.5
69	15.5	40	19	20	80	7x11x9	33.9	53.2	0.773	3.528	0.773	3.528	1.851	1.20	9.6

1N≒0.102kgf

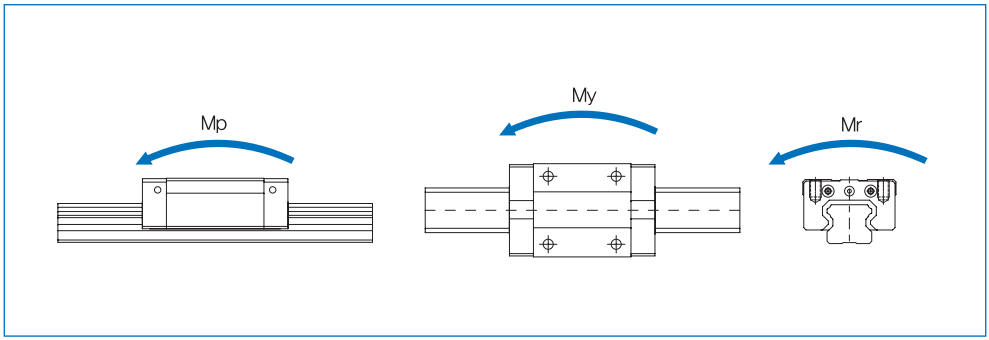

4. Slim Linear Motion Guide S Series

1) Structure of S Series

Linear Motion Guide S Series has a four-row circular arc-groove structure and a 4-direction equal load type. It also has an auto-adjusting face-to-face D/F structure. Using a ball as a rolling element, the model is a slim-type guide with a low sectional height, high rigidity and less noise.

2) Features of S Series

a. High quality, high precision, and elimination of labor.
b. High rigidity and high precision for implementing stable travel precision for a long time.
c. Excellent wear resistance and friction resistance that ensure a long life.
d. The face-to-face duplex structure just like the D/F combination of ball bearing, excellent at auto-ad justing and error-absorbing.
e. Various specifications for easy design.
f. Easy to use due to high compatibility of rail and block.
g. 4-direction equal load and high-rigidity structure.
h. A slim shape suitable for horizontal motion, ensuring stable running.

5. Slim Spacer Chain Linear Motion Guide S...S Series

1) Structure of S...S Series

Like S Series, Linear Motion Guide S...S Series has the 4-direction equal load type and auto-adjusting face-to-face D/F structure. It uses a ball as a rolling element and has a spacer between balls to prevent them from colliding each other in rolling motion. Since it makes less noise and more stable circulating motion than a full-ball type, it is possible to implement quiet running at high speed. In addition, the spacer can serve as a pocket of a lubricant.

2) Features of S...S Series

a. As a spacer-incorporated type that improves frictional properties and prevents the collision of balls, the model not only allows stable circulating motion and smooth running but also reduces noise.
b. Since a resin spacer is applied to the model, it is possible to prevent the collision of balls and the loss of oil film, and to generate less particles and dust.
c. High quality, high precision, and elimination of labor.
d. High rigidity and high precision for implementing stable travel precision for a long time.
e. Excellent wear resistance and friction resistance that ensure a long life.
f. The face-to-face duplex structure just like the D/F combination of ball bearing, excellent at auto-ad justing and error-absorbing.
g. Various specifications for easy design.
h. Easy to use due to high compatibility of rail and block.

Slim Linear Motion Guide S, S…S Series

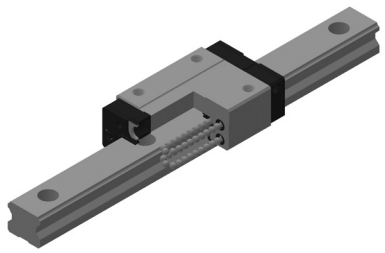

S Series (Full-ball Type)

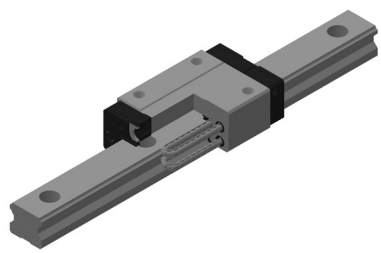

S…S Series (Spacer Chain Type)

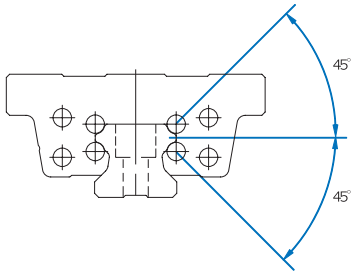

Cross Section

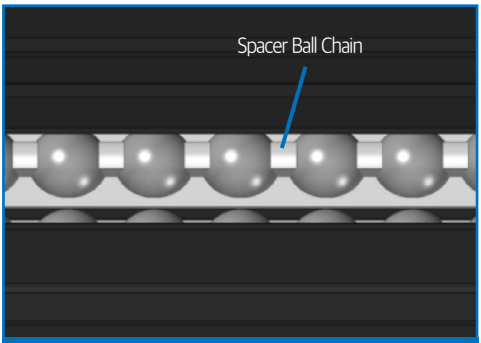

Details of spacer of S…S Series

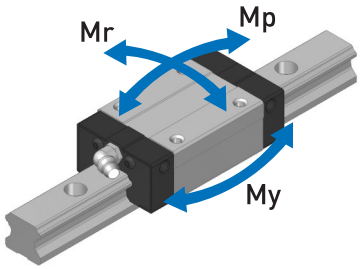

Moment Rigidity

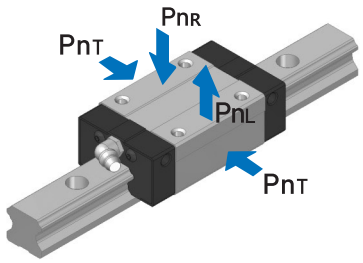

Radial Rigidity

Types and Features

Category	Type	Shape & Feature		
Compact type	S-RC S-RC...S	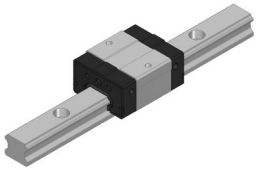	• A slim type with the tap-pro cessed top of a block, minimizing the width(W) and height(H) of a block • 4-row circular structure and 4-di rection equal load type with 45° contact angle S Series are types with a spacer retain er helping to reduce ball-to-ball friction and generate less noise and dust	Cartesian coordi-nated robot Linear actuator Automation system Semiconductor & display manufacturing system LED inspection equipment Dispenser equipment Medical Equipment High-speed transport system Woodworking machine Take-out robot Small machine tool Laser processor Precision measurement equipment
	S-RN S-RN...S	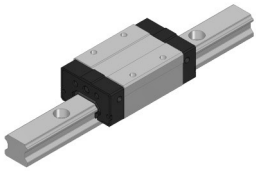	• The same cross section as in S-RC Series; a slim type with the in creased load rating by enlarging the entire length (L_1) of a block • 4-row circular structure and 4-di rection equal load type with 45° contact angle S Series are types with a spacer retain er helping to reduce ball-to-ball friction and generate less noise and dust	
Flange type	S-FC S-FC...S	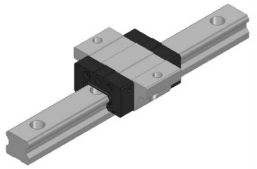	• A slim type with the tap-pro cessed top of a block, minimizing the width(W) and height(H) of a block • 4-row circular structure and 4-di rection equal load type with 45° contact angle S Series are types with a spacer retain er helping to reduce ball-to-ball friction and generate less noise and dust	
	S-FN S-FN...S	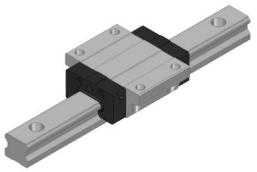	• The same cross section as in S-RC Series; a slim type with the in creased load rating by enlarging the entire length (L_1) of a block • 4-row circular structure and 4-di rection equal load type with 45° contact angle S Series are types with a spacer retain er helping to reduce ball-to-ball friction and generate less noise and dust	

Standard and maximum lengths of rail

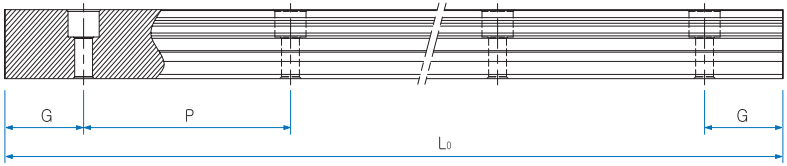

Unit : mm

Model No.	S15	S20	S25
Standard length	160	160	220
	220	220	280
	280	280	340
	⋮	340	400
	1360	⋮	460
	1480	1960	⋮
	1600	2080	2200
		2200	2320
			2440
Standard pitch P	60	60	60
G	20	20	20
Max. length	4000		

Standard tap hole type of rail

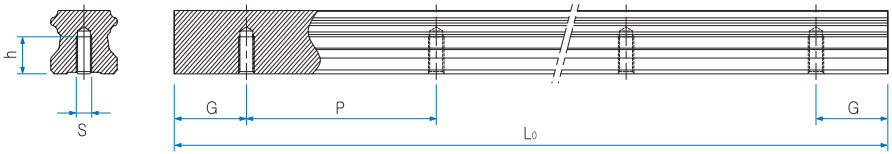

Model No.	S	h(mm)
S15	M5	8
S20	M6	10
S25	M6	12

S-RC Series, S-RN Series

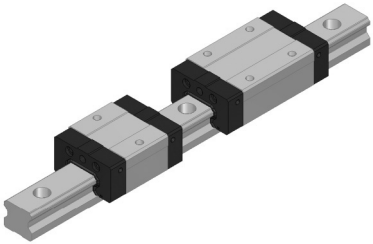

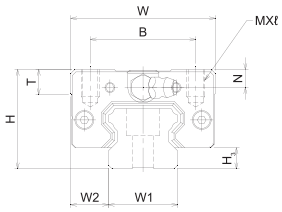

Model No.	External dimensions			Dimensions of block											H_3
	Height H	Width W	Length L	B	C	M×ℓ	L_1	T	N	E	f	e	D	Grease nipple	
S15RC	24	34	39.8	26	-	M4x6	24.0	6	6	4.7	3.7	3.25	3.3	A-M5	4.5
S15RN			56.5		26		40.8								
S20RC	28	42	47.8	32	-	M5x7	27.6	7.5	5.5	10.7	4.7	4.25	3.3	B-M6F	6
S20RN			66.8		32		46.7								
S25RC	33	48	59.4	35	-	M6x8	34.4	8	6	10.2	5	5	3.3	B-M6F	7
S25RN			83.2		35		58.2								

Composition of Model Name & Number

S15		RC		SS	2	G_2		–	1000L		20/20		P		–	2
1	2	3	4	5	6	7	8		9	10	11	12	13	14		15

1. Model No.
2. Material of block : No symbol-Standard material / M-Stainless
3. Type of block : RC-Rectangular short type / RN-Rectangular standard type / FC-Flange short type/ FN-Flange standard type
4. No symbol-Standard block / E-Special block specification
5. Type of seal : No symbol-No seal / UU-End seal / SS-End seal+Side seal+Inner seal / DD-Double seal+Side seal+Inner seal / ZZ -End seal+Side seal+Inner seal+Metal scraper / KK-Double seal+Side seal+Inner seal+Metal scraper / UULF-End seal+LF seal / SSLF-End seal+Side seal+Inner seal+LF seal / DDLF-Double seal+Side seal+Inner seal+LF seal / ZZLF-End seal+Side seal+Inner seal+Metal scraper+LF seal / KKLF-Double seal+Side seal+Inner seal+Metal scraper+LF seal (*1)
6. Number of blocks assembled in one shaft
7. Symbol of clearance : No symbol-Normal preload / G_1-Light preload / G_2-Heavy preload / Gs-Special preload (*2)
8. Material of end plate : No symbol - Standard material / I - Stainless / N - Aluminum
9. Length of rail
10. Material of rail : No symbol-Standard material / M-Stainless
11. Size of G value: standard G value has no symbol
12. No symbol-Rail counterbore type (top assembly) / A-Rail tap hole type (bottom assembly) (*3)
13. Symbol of precision : No symbol-Moderate / H-High / P-Precision / SP-Super precision / UP-Ultra precision (*4)
14. No symbol-Standard rail / E-special rail specification
15. Number of axes used in the same plane

(*1) See Symbol List of Optional Parts at page 101. (*2) See Radial Clearance at page 18.
(*3) See Standard Tap Hole Type of Rail at page 67. (*4) See Selection of Precision Class at page 20.

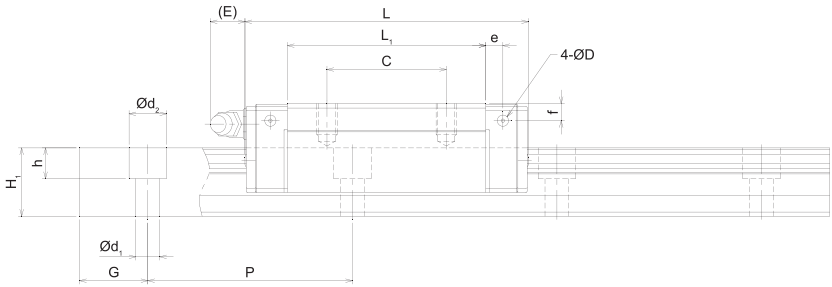

Unit : mm

Dimensions of rail						Basic load rating		Static allowance moment kN·m					Mass	
Width W_1 ±0.05	W_2	Height H_1	G	Pitch P	d_1x$d_2$xh	C kN	Co kN	Mp		My		Mr	Block kg	Rail kg/m
								1 block	Double blocks	1 block	Double blocks	1 block		
15	9.5	13	20	60	4.5x7.5x5.3	9.0	10	0.042	0.224	0.042	0.224	0.079	0.096	1.3
						12.6	16.2	0.115	0.552	0.115	0.552	0.129	0.156	
20	11	16.5	20	60	6x9.5x8.5	12.0	13.1	0.063	0.342	0.063	0.342	0.137	0.153	2.2
						16.8	21.2	0.173	0.838	0.173	0.838	0.223	0.246	
23	12.5	20	20	60	7x11x9	19.2	20.4	0.123	0.670	0.123	0.670	0.246	0.254	3.0
						27.0	33.1	0.337	1.636	0.337	1.636	0.398	0.413	

1N≒0.102kgf

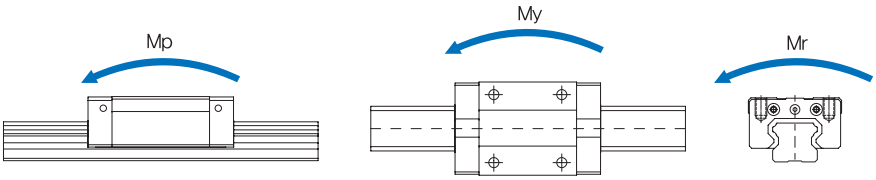

S-FC Series, S-FN Series

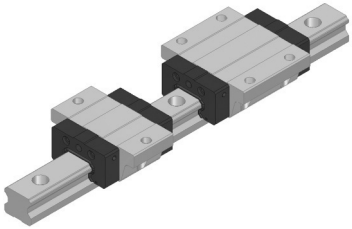

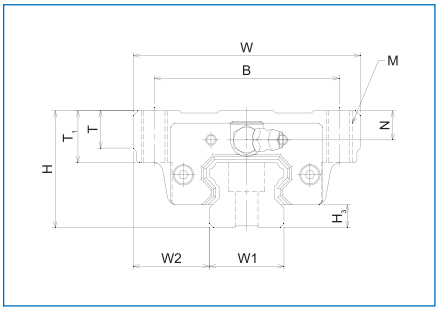

Model No.	External dimensions			Dimensions of block												H3
	Height H	Width W	Length L	B	C	M	L_1	T	T_1	N	E	f	e	D	Grease nipple	
S15FC	24	52	39.8	41	-	M5	24.0	6	7	6	4.7	3.7	3.25	3.3	A-M5	4.5
S15FN			56.5		26		40.8									
S20FC	28	59	47.8	49	-	M6	27.6	8	9	5.5	10.7	4.7	4.25	3.3	B-M6F	6
S20FN			66.8		32		46.7									
S25FC	33	73	59.4	60	-	M8	34.4	9	10	6	10.2	5	5	3.3	B-M6F	7
S25FN			83.2		35		58.2									

Composition of Model Name & Number

S15		FC		SS	2	G_2		–	1000L		20/20		P		–	2
1	2	3	4	5	6	7	8		9	10	11	12	13	14		15

1 Model No.
2 Material of block : No symbol-Standard material / M-Stainless
3 Type of block : RC-Rectangular short type / RN-Rectangular standard type / FC-Flange short type/ FN-Flange standard type
4 No symbol-Standard block / E-Special block specification
5 Type of seal : No symbol-No seal / UU-End seal / SS-End seal+Side seal+Inner seal / DD-Double seal+Side seal+Inner seal / ZZ -End seal+Side seal+Inner seal+Metal scraper / KK-Double seal+Side seal+Inner seal+Metal scraper / UULF-End seal+LF seal / SSLF-End seal+Side seal+Inner seal+LF seal / DDLF-Double seal+Side seal+Inner seal+LF seal / ZZLF-End seal+Side seal+Inner seal+Metal scraper+LF seal / KKLF-Double seal+Side seal+Inner seal+Metal scraper+LF seal (*1)
6 Number of blocks assembled in one shaft
7 Symbol of clearance : No symbol-Normal preload / G_1-Light preload / G_2-Heavy preload / Gs-Special preload (*2)
8 Material of end plate : No symbol - Standard material / I - Stainless / N - Aluminum
9 Length of rail
10 Material of rail : No symbol-Standard material / M-Stainless
11 Size of G value: standard G value has no symbol
12 No symbol-Rail counterbore type (top assembly) / A-Rail tap hole type (bottom assembly) (*3)
13 Symbol of precision : No symbol-Moderate / H-High / P-Precision / SP-Super precision / UP-Ultra precision (*4)
14 No symbol-Standard rail / E-special rail specification
15 Number of axes used in the same plane

(*1) See Symbol List of Optional Parts at page 101. (*2) See Radial Clearance at page 18.
(*3) See Standard Tap Hole Type of Rail at page 67. (*4) See Selection of Precision Class at page 20.

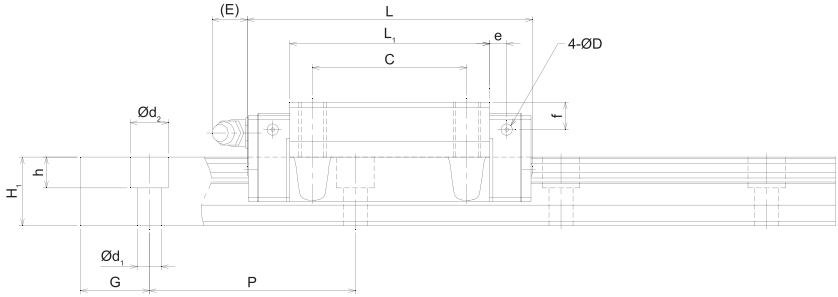

Unit : mm

Dimensions of rail						Basic load rating		Static allowance moment kN·m					Mass	
Width W_1 ±0.05	W_2	Height H_1	G	Pitch P	$d_1 x d_2 x h$	C kN	Co kN	Mp		My		Mr	Block kg	Rail kg/m
								1 block	Double blocks	1 block	Double blocks	1 block		
15	18.5	13	20	60	4.5x7.5x5.3	9.0	10	0.042	0.224	0.042	0.224	0.079	0.125	1.3
						12.6	16.2	0.115	0.552	0.115	0.552	0.129	0.203	
20	19.5	16.5	20	60	6x9.5x8.5	12.0	13.1	0.063	0.342	0.063	0.342	0.137	0.187	2.2
						16.8	21.2	0.173	0.838	0.173	0.838	0.223	0.301	
23	25.0	20	20	60	7x11x9	19.2	20.4	0.123	0.670	0.123	0.670	0.246	0.320	3.0
						27.0	33.1	0.337	1.636	0.337	0.163	0.398	0.527	

1N≒0.102kgf

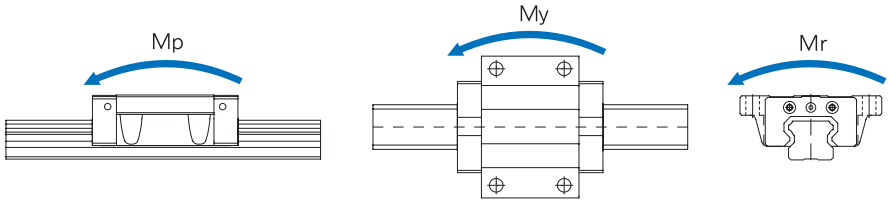

S-RC...S Series, S-RN...S Series

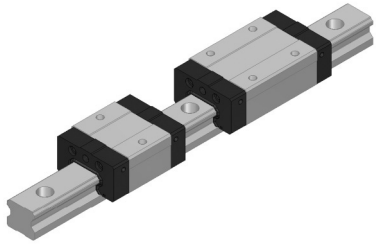

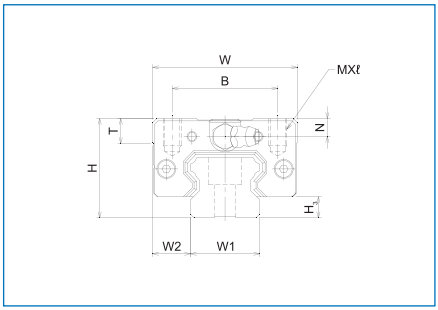

Model No.	External dimensions			Dimensions of block											H3
	Height H	Width W	Length L	B	C	M×ℓ	L1	T	N	E	f	e	D	Grease nipple	
S15RC...S	24	34	39.8	26	-	M4x6	24.0	6	6	4.7	3.7	3.25	3.3	A-M5	4.5
S15RN...S			56.5		26		40.8								
S20RC...S	28	42	47.8	32	-	M5x7	27.6	7.5	5.5	10.7	4.7	4.25	3.3	B-M6F	6
S20RN...S			66.8		32		46.7								
S25RC...S	33	48	59.4	35	-	M6x8	34.4	8	6	10.2	5	5	3.3	B-M6F	7
S25RN...S			83.2		35		58.2								

Composition of Model Name & Number

S15 [ ] RN [ ] SS 2 S G2 [ ] – 1000L [ ] 20/20 [ ] P [ ] – 2

1 2 3 4 5 6 7 8 9 10 11 12 13 14 15 16

1 Model No.
2 Material of block : No symbol-Standard material / M-Stainless
3 Type of block : RC-Rectangular short type / RN-Rectangular standard type / FC-Flange short type/ FN-Flange standard type
4 No symbol-Standard block / E-Special block specification
5 Type of seal : No symbol-No seal / UU-End seal / SS-End seal+Side seal+Inner seal / DD-Double seal+Side seal+Inner seal / ZZ-End seal+Side seal+Inner seal+Metal scraper / KK-Double seal+Side seal+Inner seal+Metal scraper / UULF-End seal+LF seal / SSLF-End seal+Side seal+Inner seal+LF seal / DDLF-Double seal+Side seal+Inner seal+LF seal / ZZLF-End seal+Side seal+Inner seal+Metal scraper+LF seal / KKLF-Double seal+Side seal+Inner seal+Metal scraper+LF seal (*1)
6 Number of blocks assembled in one shaft
7 S-Spacer chain type
8 Symbol of clearance : No symbol-Normal preload / G1-Light preload / G2-Heavy preload / Gs-Special preload (*2)
9 Material of end plate : No symbol - Standard material / I - Stainless / N - Aluminum
10 Length of rail
11 Material of rail : No symbol-Standard material / M-Stainless
12 Size of G value: standard G value has no symbol
13 No symbol-Rail counterbore type (top assembly) / A-Rail tap hole type (bottom assembly) (*3)
14 Symbol of precision : No symbol-Moderate / H-High / P-Precision / SP-Super precision / UP-Ultra precision (*4)
15 No symbol-Standard rail / E-special rail specification
16 Number of axes used in the same plane

(*1) See Symbol List of Optional Parts at page 101. (*2) See Radial Clearance at page 18.
(*3) See Standard Tap Hole Type of Rail at page 67. (*4) See Selection of Precision Class at page 20.

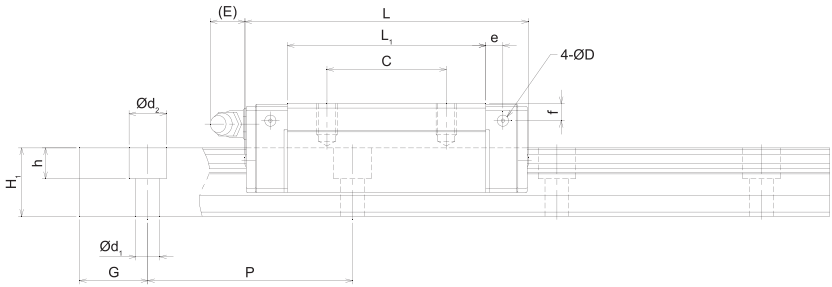

Unit : mm

Dimensions of rail						Basic load rating		Static allowance moment kN·m					Mass	
WIDTH W1 ±0.05	W2	Height H1	G	Pitch P	d1xd2xh	C kN	Co kN	Mp		My		Mr	Block kg	Rail kg/m
								1 block	Double blocks	1 block	Double blocks	1 block		
15	9.5	13	20	60	4.5x7.5x5.3	8.3	10	0.042	0.224	0.042	0.224	0.079	0.096	1.3
						12.1	16.2	0.115	0.552	0.115	0.552	0.129	0.156	
20	11	16.5	20	60	6x9.5x8.5	11.1	13.1	0.063	0.342	0.063	0.342	0.137	0.153	2.2
						16.1	21.2	0.173	0.838	0.173	0.838	0.223	0.246	
23	12.5	20	20	60	7x11x9	17.9	20.4	0.123	0.670	0.123	0.670	0.246	0.254	3.0
						25.8	33.1	0.337	1.636	0.337	1.636	0.398	0.413	

1N≒0.102kgf

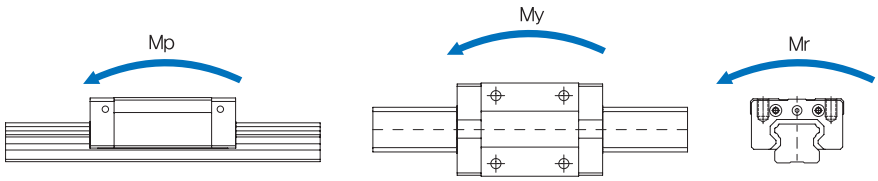

S-FC...SSeries, S-FN...SSeries

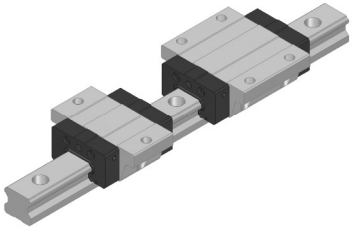

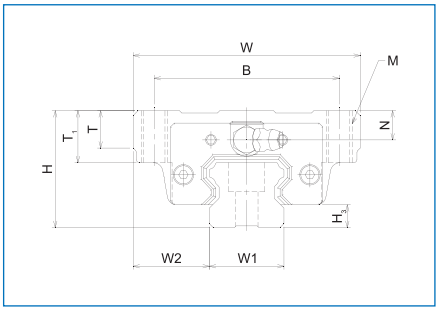

Model No.	External dimensions			Dimensions of block												H3
	Height H	Width W	Length L	B	C	M	L1	T	T1	N	E	f	e	D	Grease nipple	
S15FC...S	24	52	39.8	41	-	M5	24.0	6	7	6	4.7	3.7	3.25	3.3	A-M5	4.5
S15FN...S			56.5		26		40.8									
S20FC...S	28	59	47.8	49	-	M6	27.6	8	9	5.5	10.7	4.7	4.25	3.3	B-M6F	6
S20FN...S			66.8		32		46.7									
S25FC...S	33	73	59.4	60	-	M8	34.4	9	10	6	10.2	5	5	3.3	B-M6F	7
S25FN...S			83.2		35		58.2									

Composition of Model Name & Number

S15		FC		SS	2	S	G2		–	1000L		20/20		P		–	2
1	2	3	4	5	6	7	8	9		10	11	12	13	14	15		16

1 Model No.
2 Material of block : No symbol-Standard material / M-Stainless
3 Type of block : RC-Rectangular short type / RN-Rectangular standard type / FC-Flange short type/ FN-Flange standard type
4 No symbol-Standard block / E-Special block specification
5 Type of seal : No symbol-No seal / UU-End seal / SS-End seal+Side seal+Inner seal / DD-Double seal+Side seal+Inner seal / ZZ-End seal+Side seal+Inner seal+Metal scraper / KK-Double seal+Side seal+Inner seal+Metal scraper / UULF-End seal+LF seal / SSLF-End seal+Side seal+Inner seal+LF seal / DDLF-Double seal+Side seal+Inner seal+LF seal / ZZLF-End seal+Side seal+Inner seal+Metal scraper+LF seal / KKLF-Double seal+Side seal+Inner seal+Metal scraper+LF seal (*1)
6 Number of blocks assembled in one shaftled in one shaft
7 S-Spacer chain type
8 Symbol of clearance : No symbol-Normal preload / G1-Light preload / G2-Heavy preload / Gs-Special preload (*2)
9 Material of end plate : No symbol - Standard material / I - Stainless / N - Aluminum
10 Length of rail
11 Material of rail : No symbol-Standard material / M-Stainless
12 Size of G value: standard G value has no symbol
13 No symbol-Rail counterbore type (top assembly) / A-Rail tap hole type (bottom assembly) (*3)
14 Symbol of precision : No symbol-Moderate / H-High / P-Precision / SP-Super precision / UP-Ultra precision (*4)
15 No symbol-Standard rail / E-special rail specification
16 Number of axes used in the same plane

(*1) See Symbol List of Optional Parts at page 101. (*2) See Radial Clearance at page 18.
(*3) See Standard Tap Hole Type of Rail at page 67. (*4) See Selection of Precision Class at page 20.

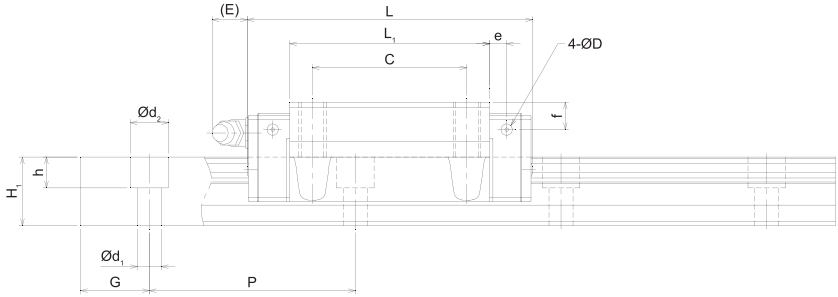

Unit : mm

Dimensions of rail						Basic load rating		Static allowance moment kN·m					Mass	
WIDTH W1 ±0.05	W2	Height H1	G	Pitch P	d1xd2xh	C kN	Co kN	Mp		My		Mr	Block kg	Rail kg/m
								1 block	Double blocks	1 block	Double blocks	1 block		
15	18.5	13	20	60	4.5x7.5x5.3	8.3	10	0.042	0.224	0.042	0.224	0.079	0.125	1.3
						12.1	16.2	0.115	0.552	0.115	0.552	0.129	0.203	
20	19.5	16.5	20	60	6x9.5x8.5	11.1	13.1	0.063	0.342	0.063	0.342	0.137	0.187	2.2
						16.1	21.2	0.173	0.838	0.173	0.838	0.223	0.301	
23	25.0	20	20	60	7x11x9	17.9	20.4	0.123	0.670	0.123	0.670	0.246	0.320	3.0
						25.8	33.1	0.337	1.636	0.337	1.636	0.398	0.527	

1N≒0.102kgf

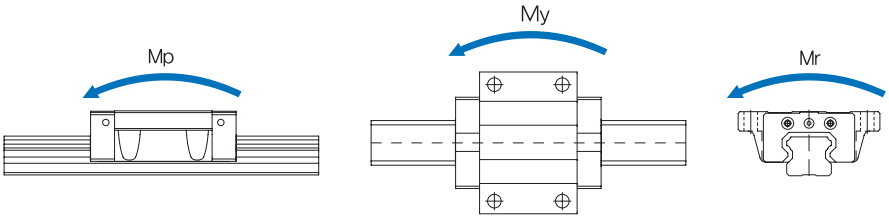

6. Slim Linear Motion Guide HS, HS…S Series

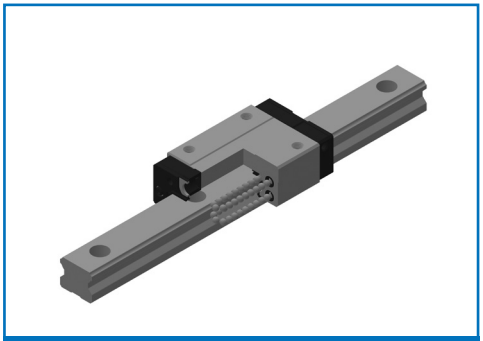

HS Series (Full Ball Type)

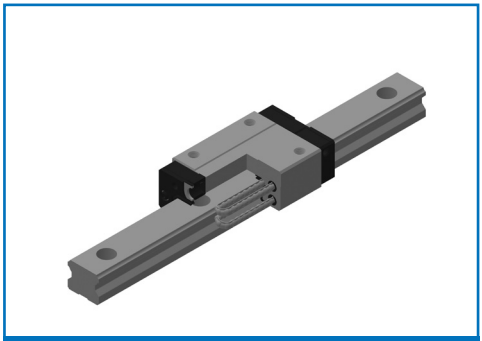

HS…S Series (Spacer Chain Type)

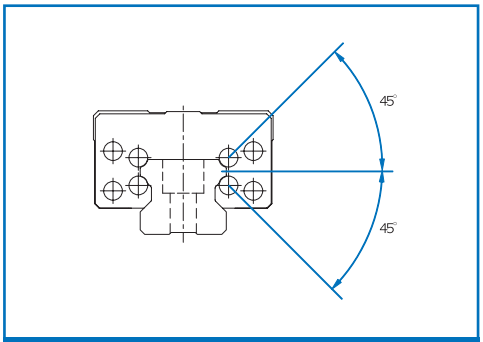

Cross Section

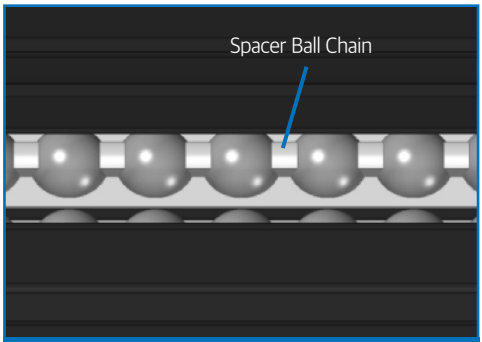

Details of spacer of HS-S Series

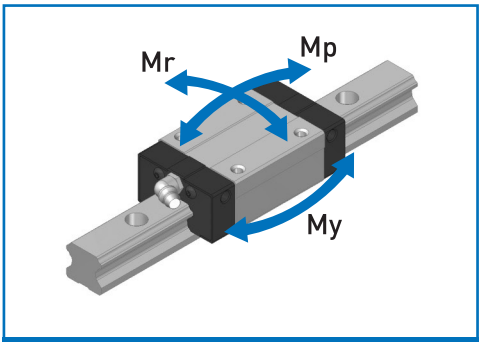

Moment Rigidity

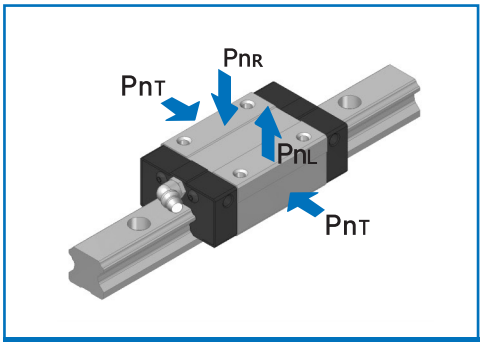

Radial Rigidity

Standard and maximum lengths of rail

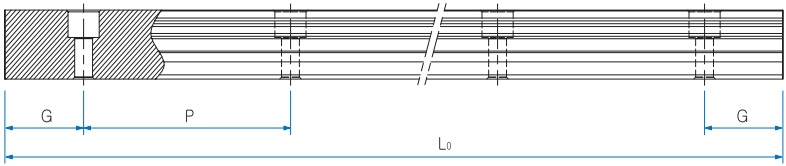

Unit : mm

Model No.	HS25	HS30	HS35	HS45	HS55
Standard length	220	280	440	570	780
	340	360	520	675	900
	400	440	600	780	1020
	⋮	520	760	885	⋮
	2200	⋮	840	⋮	2820
	2320	2520	⋮	2880	2940
	2440	2680	2840	2985	3060
		2840	2920	3090	
			3000		
Standard pitch P	60	80	80	10.5	120
G	20	20	20	22.5	30
Max. length	4000				

Standard tap hole type of rail

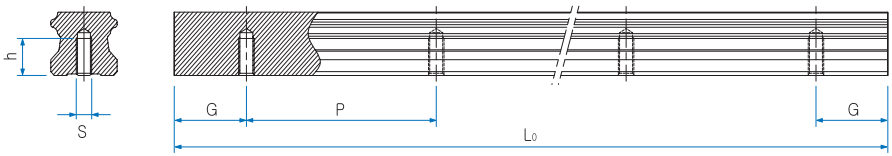

Model No.	S	h(mm)
HS25	M6	12
HS30	M8	15
HS35	M8	17
HS45	M12	24
HS55	M14	24

HS-RN Series, HS-RL Series

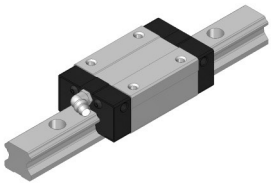

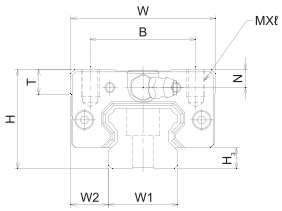

Model No.	External dimensions			Dimensions of block											H3
	Height H	Width W	Length L	B	C	M×ℓ	L1	T	N	E	f	e	D	Grease nipple	
HS25RN	36	48	83.2	35	35	M6x6.5	58.3	8	9	10.2	8	5	3.3	B-M6F	7
HS25RL			103.1		50		78.2								
HS30RN	42	60	99.3	40	40	M8x8	70.8	8	8.2	9.8	5.9	5.8	5.2	B-M6F	7
HS30RL			121.5		60		93								
HS35RN	48	70	111.8	50	50	M8x10	80.8	15	10	9.7	8.5	6.5	5.2	B-M6F	7.5
HS35RL			137.2		72		106.2								

Composition of Model Name & Number

HS35	RN		SS	2	G2		—	1000L		20/20		P		—	2
1	2	3	4	5	6	7		8	9	10	11	12	13		14

1 Model No.
2 Type of block :RN-Rectangular standard type
3 No symbol-Standard block / E-Special block specification
4 Type of seal : No symbol-No seal / UU-End seal / SS-End seal+Side seal+Inner seal / DD-Double seal+Side seal+Inner seal / ZZ-End seal+Side seal+Inner seal+Metal scraper / KK-Double seal+Side seal+Inner seal+Metal scraper / UULF-End seal+LF seal / SSLF-End seal+Side seal+Inner seal+LF seal / DDLF-Double seal+Side seal+Inner seal+LF seal / ZZLF-End seal+Side seal+Inner
5 seal+Metal scraper+LF seal / KKLF-Double seal+Side seal+Inner seal+Metal scraper+LF seal (*1)
6 Number of blocks assembled in one shaft
7 Symbol of clearance : No symbol-Normal preload / G1-Light preload / G2-Heavy preload / Gs-Special preload (*2)
8 Material of end plate : No symbol - Standard material / I - Stainless / N - Aluminum
9 Length of rail
10 Material of rail : No symbol-Standard material / M-Stainless
11 Size of G value: standard G value has no symbol
12 No symbol-Rail counterbore type (top assembly) / A-Rail tap hole type (bottom assembly) (*3)
13 Symbol of precision : No symbol-Moderate / H-High / P-Precision / SP-Super precision / UP-Ultra precision (*4)
14 No symbol-Standard rail / E-special rail specification
Number of axes used in the same plane

(*1) See Symbol List of Optional Parts at page 101. (*2) See Radial Clearance at page 18.
(*3) See Standard Tap Hole Type of Rail at page 77. (*4) See Selection of Precision Class at page 20.

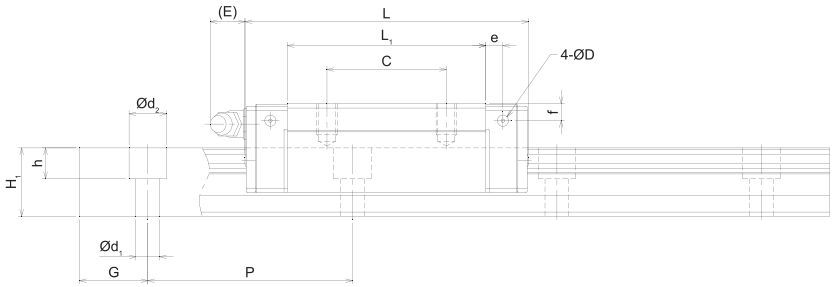

Unit : mm

Dimensions of rail						Basic load rating		Static allowance moment kN·m					Mass	
Width W_1 ±0.05	W_2	Height H_1	G	Pitch P	$d_1 x d_2 x h$	C kN	Co kN	Mp		My		Mr	Block kg	Rail kg/m
								1 block	Double blocks	1 block	Double blocks	1 block		
23	12.5	20	20	60	7x11x9	27.0	33.1	0.337	1.636	0.337	1.636	0.398	0.53	3.0
						32.8	43.6	0.596	2.760	0.596	2.760	0.525	0.71	
28	16	25.1	20	80	9x14x14.1	50.4	57.1	0.711	3.384	0.711	3.384	0.828	0.9	4.85
						60.3	73.6	1.203	5.506	1.203	5.506	1.067	1.1	
34	18	27	20	80	9x14x13	67.0	74.6	1.062	5.012	1.062	5.012	1.298	1.5	6.58
						80.2	96.2	1.797	8.172	1.797	8.172	1.674	2.01	

1N≒0.102kgf

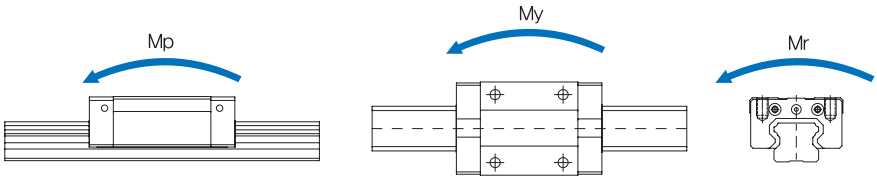

HS-RN...S Series, HS-RL...S Series

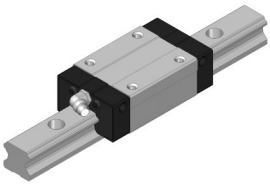

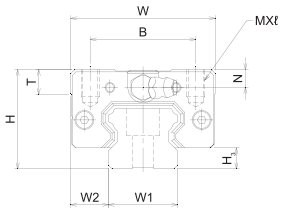

Model No.	External dimensions			Dimensions of block											H3
	Height H	Width W	Length L	B	C	M×ℓ	L1	T	N	E	f	e	D	Grease nipple	
HS25RN...S	36	48	83.2	35	35	M6x6.5	58.3	8	9	10.2	8	5	3.3	B-M6F	7
HS25RL...S			103.1		50		78.2								
HS30RN...S	42	60	99.3	40	40	M8x8	70.8	8	8.2	9.8	5.9	5.8	5.2	B-M6F	7
HS30RL...S			121.5		60		93								
HS35RN...S	48	70	111.8	50	50	M8x10	80.8	15	10	9.7	8.5	6.5	5.2	B-M6F	7.5
HS35RL...S			137.2		72		106.2								

Composition of Model Name & Number

HS35	RL		SS	2	S	G2		—	1000L		20/20		P		—	2
1	2	3	4	5	6	7	8		9	10	11	12	13	14		15

1 Model No.
2 Type of block : RN-Rectangular standard type
3 No symbol-Standard block / E-Special block specification
4 Type of seal : No symbol-No seal / UU-End seal / SS-End seal+Side seal+Inner seal / DD-Double seal+Side seal+Inner seal / ZZ-End seal+Side seal+Inner seal+Metal scraper / KK-Double seal+Side seal+Inner seal+Metal scraper / UULF-End seal+LF seal / SSLF-End seal+Side seal+Inner seal+LF seal / DDLF-Double seal+Side seal+Inner seal+LF seal / ZZLF-End seal+Side seal+Inner seal+Metal scraper+LF seal / KKLF-Double seal+Side seal+Inner seal+Metal scraper+LF seal (*1)
5 Number of blocks assembled in one shaft
6 No symbol-Full ball type / S-Spacer chain type
7 Symbol of clearance : No symbol-Normal preload / G1-Light preload / G2-Heavy preload / Gs-Special preload (*2)
8 Material of end plate : No symbol - Standard material / I - Stainless / N - Aluminum
9 Length of rail
10 Material of rail : No symbol-Standard material / M-Stainless
11 Size of G value: standard G value has no symbol
12 No symbol-Rail counterbore type (top assembly) / A-Rail tap hole type (bottom assembly) (*3)
13 Symbol of precision : No symbol-Moderate / H-High / P-Precision / SP-Super precision / UP-Ultra precision (*4)
14 No symbol-Standard rail / E-special rail specification
15 Number of axes used in the same plane

(*1) See Symbol List of Optional Parts at page 101. (*2) See Radial Clearance at page 18.
(*3) See Standard Tap Hole Type of Rail at page 77. (*4) See Selection of Precision Class at page 20.

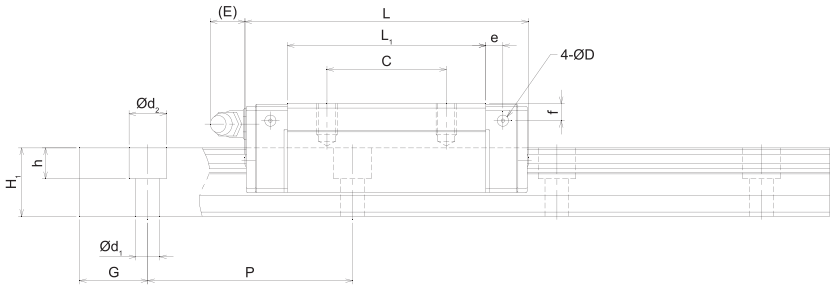

Unit : mm

Dimensions of rail						Basic load rating		Static allowance moment kN·m					Mass	
Width W_1 ±0.05	W_2	Height H_1	G	Pitch P	$d_1 x d_2 x h$	C kN	Co kN	Mp		My		Mr	Block kg	Rail kg/m
								1 block	Double blocks	1 block	Double blocks	1 block		
23	12.5	20	20	60	7x11x9	25.8	33.1	0.337	1.636	0.337	1.636	0.398	0.53	3.0
						31.7	43.6	0.596	2.760	0.596	2.760	0.525	0.71	
28	16	25.1	20	80	9x14x14.1	48.0	57.1	0.711	3.384	0.711	3.384	0.828	0.9	4.85
						58.0	73.6	1.203	5.506	1.203	5.506	1.067	1.1	
34	18	27	20	80	9x14x13	63.7	74.6	1.062	5.012	1.062	5.012	1.298	1.5	6.58
						77.1	96.2	1.797	8.172	1.797	8.172	1.674	2.01	

1N≒0.102kgf

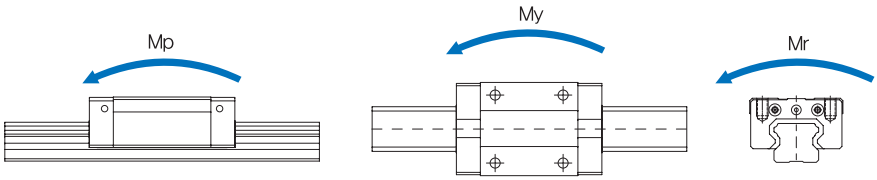

7. Miniature Linear Motion Guide M Series

1) Structure of M Series

WON Miniature Linear Motion Guide M Series has a shape of a gothic-arch groove in the raceway of a rail and a block and a 4-direction equal type structure with 2-row 4-point contact balls at 45 degree. This model, though small-sized, supports stable travel and high rigidity for variable load or complex load under which a direction or size changes.

2) Features of M Series

a. A compact and highly-rigid 4-direction equal load type.
b. A variety of specifications in consideration of space and load rating in order for easy design.
c. It is convenient to maintain balls at the time of block-rail assembly, for a block has the wire to prevent ball separation built in.
d. This model made of stainless steel is resistant for rust. Therefore, it is suitable in a rust-resistive envi ronment or the cleanroom that inhibits generation of particles.

8. Wide Miniature Linear Motion Guide MB Series

1) Structure of MB Series

Like M Series, WON Miniature Linear Motion Guide MB Series has the 4-direction equal load type. As its rail and block get widened, the model improves basic load rating and moment load compared to M Series.

2) Features of MB Series

a. Wide block and rail, an increased number of effective balls, and improved load rating and moment load.
b. Wider than a general type of miniature linear motion guide, increased rigidity, and very favorable in the use of one axis.
c. A compact and highly-rigid 4-direction equal load type.
d. A variety of specifications in consideration of space and load rating in order for easy design.
e. It is convenient to maintain balls during block-rail assembly, for a block has the wire to prevent ball separation.
f. This model made of stainless steel is resistant for rust. Therefore, it is suitable in a rust-resistive envi ronment or the cleanroom that inhibits generation of particles. (The bearing steel materials for MB 12 and MB 15 are reserved.)

Miniature Linear Motion Guide M, MB Series

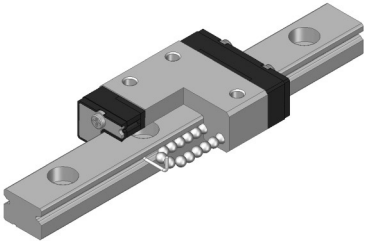

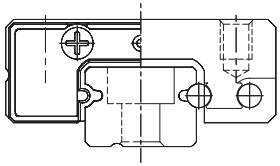

Standard M Series

Standard type

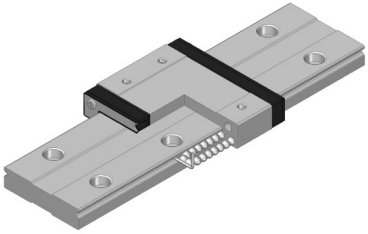

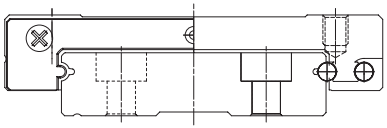

Wide MB Series

Wide type

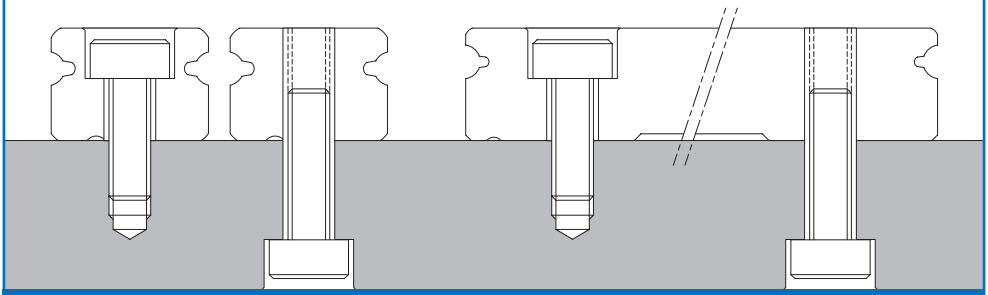

Bolt fastening

Types and Features

Category	Type	Shape & Feature		
Compact type	M-C	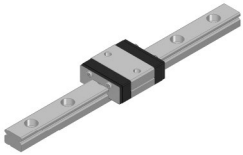	Standard Type of Miniature Linear Motion Guide The bearing steel materials for M12 and M15 (MT12, MT15) are available	Semiconductor inspection equipment Semiconductor assembly equipment Display inspection Head-axis LED inspection equipment Pneumatic machinery Table cylinder Automation machinery Medical equipment Smart actuator Cartesian coordinated robot UVW stage
	M-N	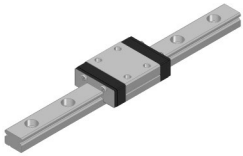		
	M-L	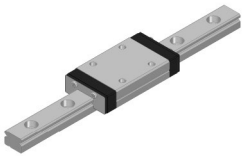		
Flange type	MB-C MBT-C	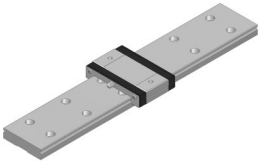	Wider block (W) and longer total length (L_1) than M Series; highly-rig id and wide type with improved load rating and allowance moment The bearing steel materials for MB12 and MB15 (MBT12, MBT15) are ava ilable	
	MB-N MBT-N	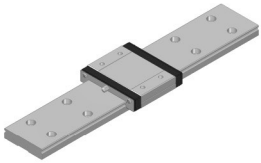		
	MB-L MBT-L	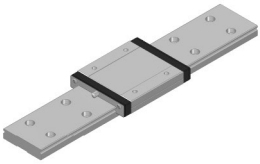		

Standard and maximum lengths of rail

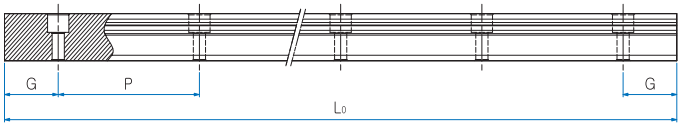

Unit : mm

Model No.	M5	M7	M9	M12	MT12	M15	MT15	M20	MB5	MB7	MB9	MB12	MBT12	MBT13	MB15	MBT15
Standard type	40	40	55	70	70	70	70	220	50	50	50	70	70	110	110	110
	55	55	75	95	95	110	110	280	70	80	80	110	110	150	150	150
	70	70	95	120	120	150	150	340	90	110	110	150	150	190	190	190
	⋮	⋮	115	145	145	190	190	460	⋮	⋮	140	190	190	230	230	230
	100	100	⋮	170	170	230	230	⋮	130	260	⋮	230	230	270	270	270
	130	130	275	⋮	⋮	⋮	⋮	1120	150	290	500	⋮	⋮	⋮	⋮	⋮
	160	160	375	570	570	670	670	1240	170	350	710	590	590	750	750	750
			495	695	695	870	870	1360			860	750	750	790	790	790
				820	820	1070	1070					910	910	910	910	910
Standard maximum length	1000	1000	995	995	1995	1990	1990	1960	990	980	2000	1990	1990	1990	1990	1990
Standard pitch P	15	15	20	25	25	40	40	60	20	30	30	40	40	40	40	40
G	5	5	7.5	10	10	15	15	20	5	10	10	15	15	15	15	15
Maximum length	1000				2000				1000		2000					

Standard tap hole type of rail

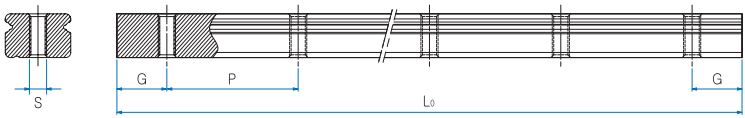

Model No.	S(Penetrated)
M5	M2.6
M7	M3
M9	M4
M12 / MT12	M4
M15 / MT15	M4
M20	M6

Model No.	S(Penetrated)
MB5	M3
MB7	M4
MB9	M4
MB12 / MBT12	M5
MBT13	M5
MB15 / MBT15	M5

M Series

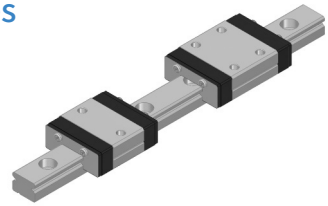

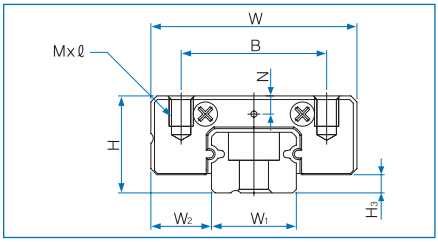

Model No.	External dimensions			Dimensions of block							H3
	Height H	Width W	Length L	B	C	M×ℓ	L1	N	E	Grease nipple	
M 5C	6	12	17	8	–	M2 x 1.5	9.4	1.2	–	–	1
M 5N			20				12.4				
M 5NA				–	7	M2.6 x 1.5					
M 7C	8	17	19.8	12	–	M2 x 2.5	9.6	1.5	–	–	1.5
M 7N			24.3		8		14.1				
M 7L			31.8		13		21.6				
M 7LA			31.0		12		20.8				
M 9C	10	20	22.4	15	–	M3 x 3	11.8	2.2	–	–	2
M 9N			31.3		10		20.7				
M 9L			41.4		16		30.8				
M 9LA					15						
M 12C	13	27	26.4	20	–	M3 x 3.5	12.8	2.7	–	–	3
M 12N			34.9		15		21.3				
M 12L			45.4		20		31.8				
M 15C	16	32	34.4	25	–	M3 x 4	17.7	3.1	3.3	A–M3	4
M 15N			44.4		20		27.7				
M 15L			59.4		25		42.7				
M 20C	20	40	39.8	30	–	M4 x 6	22.2	4.2	3.3	A–M3	5
M 20N			51.8		25		34.2				
M 20L			69.8		30		52.2				

※ The carbon steel materials based rails for M12 and M15 (MT12, MT15) are reserved.

Composition of Model Name & Number

M12		N		UU	2	G1		—	1000L		20/20		P		—	2
1	2	3	4	5	6	7	8		9	10	11	12	13	14		15

1 Model No.
2 Material of block : No symbo-Stainless / T-Carbon steel (*1)
3 Type of block : C-Short type/ N-Standard type / L-Long type
4 No symbol-Standard block / E-Special block specificatio
5 Type of seal: UU-End seal / UULF-End seal+ LF seal (*2)
6 Number of blocks combined in one axis
7 Symbol of clearance: No symbol-Normal preload / G1-Light preload (*3)
8 Material of end plate: No symbol-Standard material / I - Stainless / N - Aluminum
9 Length of rail
10 Material of rail: No symbol-Stainless / T-Carbon steel
11 Size of G value: Standard G value has no symbol
12 No symbol-Rail counterbore type (top assembly) / A-Rail tap hole type (bottom assembly) (*4)
13 Symbol of precision: No symbol-Moderate / H-High / P-Precision (*5)
14 No symbol-Standard rail /E-Special rail specification
15 Number of axes used in the same plane

(*1) The material of carbon steel is confined to M12-M20
(*2) See Symbol List of Optional parts at page 101
(*3) See Radial Clearance at page 18
(*4) See Standard Tap Hole Type of Rail at page 85
(*5) See Selection of Precision Class at page 22

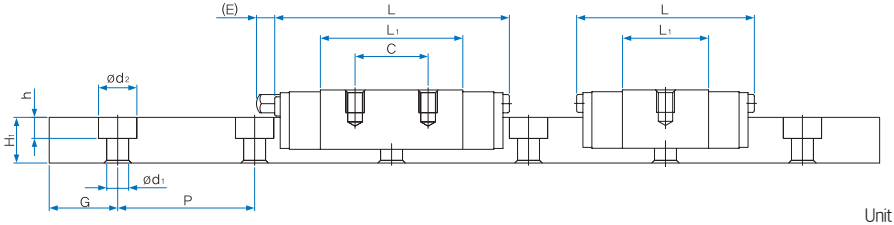

Unit : mm

Dimensions of rail						Basic load rating		Static allowance moment N·m					Mass	
Width W_1 ±0.05	W_2	Height H_1	G	Pitch P	$d_1 x d_2 x h$	C N	Co N	Mp 1 block	Mp Double blocks	My 1 block	My Double blocks	Mr 1 block	Block kg	Rail kg/m
5 0 -0.02	3.5	3.7	5	15	2.4x3.6x0.8	516	757	1.3	7.1	1.3	7.1	2.01	3.1	139
						631	1,009	2.2	11.6	2.2	11.6	2.67	4.0	
7 0 -0.02	5	5	5	15	2.4x4.2x2.3	901	1,136	1.9	11.8	1.9	11.8	4.14	6.4	253
						1,197	1,703	4.2	23.1	4.2	23.1	6.22	9.0	
						1,631	2,650	10.1	50.0	10.1	50.0	9.67	12.6	
						1,549	2,460							
9 0 -0.02	5.5	6	7.5	20	3.5x6x3.5	1,180	1,485	3.1	17.9	3.1	17.9	6.90	9.9	391
						1,721	2,545	9.3	46.6	9.3	46.6	11.84	17.1	
						2,375	4,030	21.9	102.8	21.9	102.8	18.74	25.2	
12 0 -0.025	7.5	8	10	25	3.5x6.5x4.5	2,175	2,385	5.4	32.9	5.4	32.9	14.79	19.8	679
						3,023	3,816	14.4	75.8	14.4	75.8	23.66	31.5	
						4,246	6,200	34.8	169.1	34.8	169.1	38.44	45.9	
15 0 -0.025	8.5	10	15	40	3.5x6.5x4.5	3,418	3,895	12.2	71.6	12.2	71.6	29.99	37.8	1071
						4,540	5,842	28.6	148.7	28.6	148.7	44.99	57.6	
						6,492	9,737	73.5	351.2	73.5	351.2	74.98	85.5	
20 0 -0.03	10	11	20	60	6x9.5x5.5	4,512	5,299	20.7	115.9	20.7	115.9	54.05	80.1	1572
						6,191	8,328	50.2	252.7	50.2	252.7	84.94	119.7	
						8,396	12,870	118.6	554.4	118.6	554.4	131.27	176.4	

1N≒0.102kgf

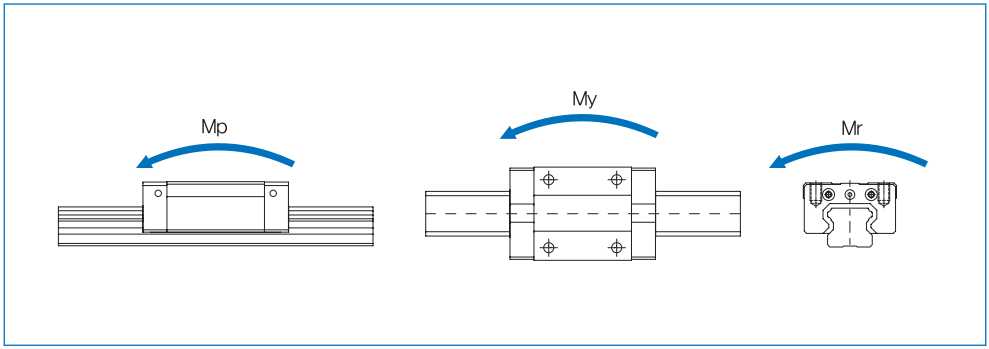

MB Series

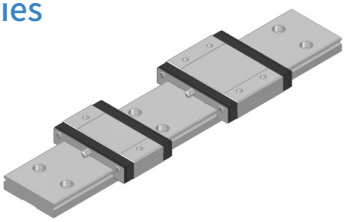

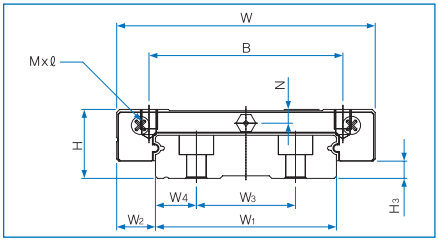

Model No.	External dimensions			Dimensions of block							H_3
	Height H	Width W	Length L	B	C	M×ℓ	L_1	N	E	Grease nipple	
MB 5C	6.5	17	21	13	–	M2.5 x 1.5	13.4	1.4	–	–	1.3
MB 5N			25		–		17.4				
MB 7C	9	25	24	19	–	M3 x 3	12.6	1.7	–	–	2
MB 7N			33		10		21.6				
MB 7L			43.5		19		32.1				
MB 9C	12	30	28.1	21	–	M3 x 3	16.5	3.2	–	–	3
MB 9N			40.2		12		28.6				
MB 9L			52	23	24		40.4				
MB 12C	14	40	31.1	28	–	M3 x 3.5	17.5	3	–	–	4
MB 12N			44.5		15		30.9				
MB 12L			59.7		28		46.1				
MBT 13C	15	50	35.3	35	–	M4 x 4.5	18.7	3.1	3.3	A–M3	3
MBT 13N			49.2		18		32.6				
MBT 13L			68.6		35		52				
MB 15C	16	60	42.8	45	–	M4 x 4.5	25.2	3.5	3.3	A–M3	4
MB 15N			56.6		20		39				
MB 15L			75.8		35		58.2				

※The carbon steel materials based rails for MB12 and MB15 (MBT12, MBT15) are reserved.
※As for MBT13, only carbon steel is prepared

Composition of Model Name & Number

MB12		N		UU	2	G_1		—	1000L		20/20		P		—	2
1	2	3	4	5	6	7	8		9	10	11	12	13	14		15

1 Model No.
2 Material of block : No symbo-Stainless / T-Carbon steel (*1)
3 Type of block : C-Short type/ N-Standard type / L-Long type
4 No symbol-Standard block /E-Special block specificatio
5 Type of seal: UU-End seal / UULF-End seal+ LF seal (*2)
6 Number of blocks combined in one axis
7 Symbol of clearance: No symbol-Normal preload / G_1-Light preload (*3)
8 Material of end plate: No symbol-Standard material / I - Stainless / N - Aluminum
9 Length of rail
10 Material of rail: No symbol-Stainless / T-Carbon steel
11 Size of G value: Standard G value has no symbol
12 No symbol-Rail counterbore type (top assembly) / A-Rail tap hole type (bottom assembly) (*4)
13 Symbol of precision: No symbol-Moderate / H-High / P-Precision (*5)
14 No symbol-Standard rail / E-Special rail specification
15 Number of axes used in the same plane

(*1) The material of carbon steel is confined to MB12-MB15
(*2) See Symbol List of Optional parts at page 101
(*3) See Radial Clearance at page 18
(*4) See Standard Tap Hole Type of Rail at page 85
(*5) See Selection of Precision Class at page 22

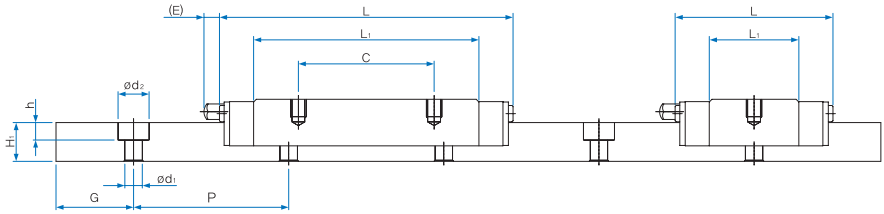

Unit : mm

Dimensions of rail								Basic load rating		Static allowance moment kN·m					Mass	
Width W_1 ±0.05	W_2	W_3	W_4	Height H_1	G	Pitch P	$d_1 x d_2 x h$	C kN	Co kN	Mp 1 block	Mp Double blocks	My 1 block	My Double blocks	Mr 1 block	Block kg	Rail kg/m
$10^{0}_{-0.025}$	3.5	–	–	4	5	20	2.9x4.8x1.6	668	1,094	2.6	13.3	2.6	13.3	5.63	5.3	299
								806	1,430	4.4	21.4	4.4	21.4	7.36	6.8	
$14^{0}_{-0.05}$	5.5	–	–	5.5	10	30	3.5x6x3.2	1,102	1,514	3.4	19.5	3.4	19.5	10.83	11.7	560
								1,631	2,650	10.1	51.1	10.1	51.1	18.95	18.9	
								2,166	3,975	22.5	106.1	22.5	106.1	28.42	27.9	
$18^{0}_{-0.05}$	6	–	–	7	10	30	3.5x6x4.5	1,515	2,121	6.2	33.4	6.2	33.4	19.41	23.4	912
								2,197	3,606	18.2	87.6	18.2	87.6	33.00	39.6	
								2,878	5,303	37.8	172.9	37.8	172.9	48.52	54.9	
$24^{0}_{-0.05}$	8	–	–	8.5	15	40	4.5x8x4.5	2,753	3,339	10.3	57.3	10.3	57.3	40.73	40.5	1369
								4,015	5,723	31.2	152.2	31.2	152.2	69.83	68.4	
								5,539	9,062	73.8	338.7	73.8	338.7	110.56	99.9	
$30^{0}_{-0.05}$	10	–	–	9	15	40	4.5x8x4.5	3,694	4,351	14.3	82.8	14.3	82.8	66.1	60.0	2086
								5,457	7,599	43.7	219.3	43.7	219.3	115.5	103.8	
								7,576	12,142	111.5	517.4	111.5	517.4	184.6	165.5	
$42^{0}_{-0.05}$	9	23	9.5	9.5	15	40	4.5x8x4.5	4,954	6,056	26.9	145.3	26.9	145.3	128.40	85.5	2886
								6,579	9,085	62.5	306.5	62.5	306.5	192.60	126.0	
								9,076	14,384	147.8	680.6	147.8	680.6	304.94	183.6	

1N≒0.102kgf

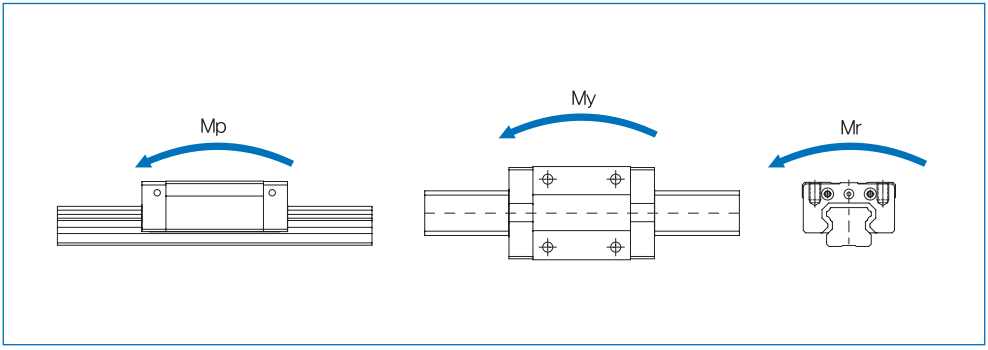

9. Roller Linear Motion Guide R Series

1) Structure of R Series

WON Linear Motion Guide R Series uses the roller in the raceway surface of a rail and a block as a rolling element, and its four-row cylindrical roller has the contact angle of 45° which makes it possible to bears vertical tensile compression load and horizontal load equally. In the model, a roller, a rolling element, has less elastic displacement than a ball so that its displacement by external load is low. Due to the wide area of contact between the raceway surface and a roller, it can bear high load with high rigidity. Therefore, the model has a long life span, and excellent impact resistance and wear resistance. In addition, since it has less friction resistance, it supports smooth motion and quiet running. By imposing appropriate preload on a roller according to use conditions, it is possible to enhance more rigidity of a linear motion guide.

2) Features of R Series

a. High quality, high precision, and elimination of labor

b. High rigidity and high precision for implementing stable travel precision for a long time

c. Excellent wear resistance and friction resistance that ensure a long life

d. High rigidity and high load capacity, compared to ball type devices with the same model number

e. Low displacement for impact load or variable load, compared to ball type linear motion guides; excellent vibration resistance with a short vibration decay time for natural frequency

f. High basic load rating, compared to ball type linear motion guides with the same specification, makes it possible to support a compact design through the use of a smaller model number than that of a ball type device. In case of the same model number, it is possible to have a longer life span due to high load rating.

g. A variety of specifications for easy design

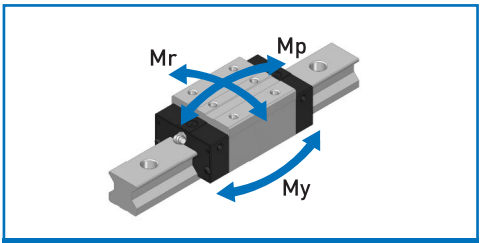

Moment Rigidity

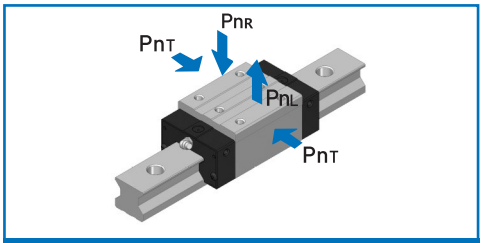

Radial Rigidity

Tap hole type (A-type)

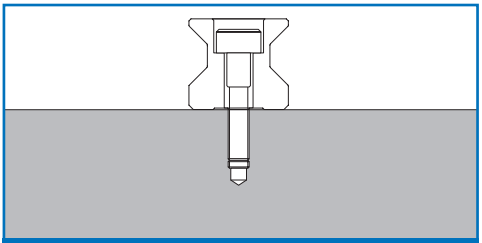

tap hole type (A-type)

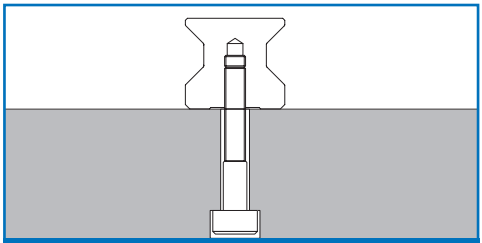

tap hole type (A-type)

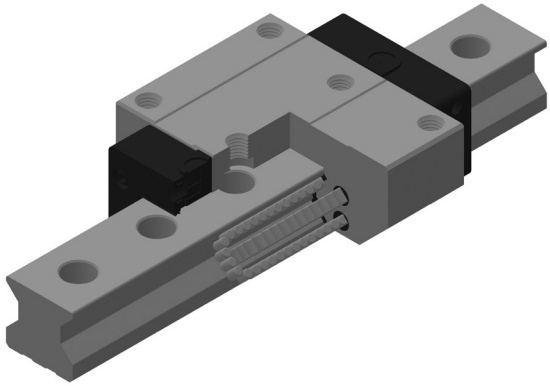

R Series

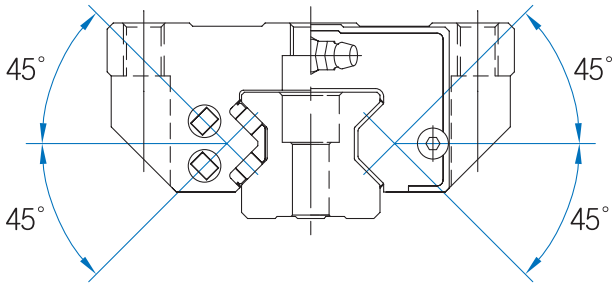

Cross Section

Types and Features

Category	Type	Shape & Feature		
Flange type	R-FN	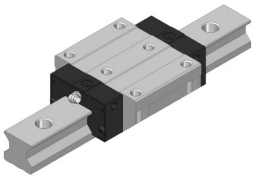	• A roller type with the tap-pro cessed flange of a block, support ing installation from bottom to top and from top to bottom • 4-direction equal load type with high rigidity and high load	Machine tool CNC machining center CNC tapping center NC milling machine Boring machine Multiple machining center Planner miller Large injection machine Heavy-duty cutting machine Wire-cut pentahedral processing center Display test equipment
	R-FN	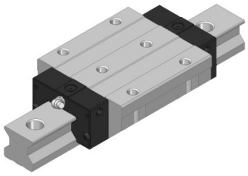	• The same cross section as in R-F Series; a roller type with increased load rating by enlarging the entire length (L_1) of a block • 4-direction equal load type with high rigidity and high load	
Compact type	R-RN	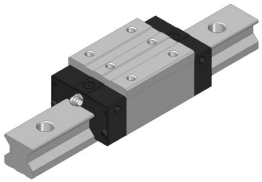	• A compact type with the tap-pro cessed top of a block, minimizing the width (W) of a block • 4-direction equal load type with high rigidity and high load	
	R-RL	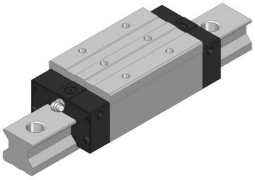	• The same cross section as in R-R Series; a roller type with increased load rating by enlarging the entire length (L_1) of a block • 4-direction equal load type with high rigidity and high load	

Standard and maximum lengths of rail

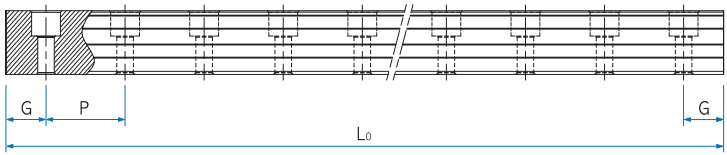

Unit : mm

Model No.	R25	R30	R35	R45	R55	R65
Standard type	220	280	280	570	780	1270
	280	360	360	675	900	1570
	340	440	440	780	1020	1870
	400	520	520	885	1140	2170
	460	600	600	990	1260	2470
	⋮	⋮	⋮	⋮	⋮	2770
	3820	3760	3760	3615	3600	3070
	3880	3840	3840	3720	3720	3670
	3940	3920	3920	3825	3840	3970
	4000	4000	4000	3930	3960	
Standard pitch P	30	40	40	52.5	60	75
G	20	20	20	22.5	30	35
Max. length	4000	4000	4000	3930	3960	3970

Standard tap hole type of rail

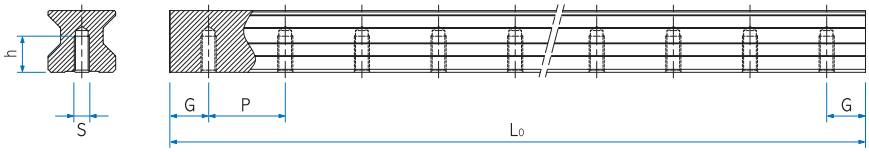

Model No.	S	h(mm)
R25	M6	12
R30	M8	15
R35	M8	17
R45	M12	24
R55	M14	24
R65	M16	25

R-FN Series, R-FL Series

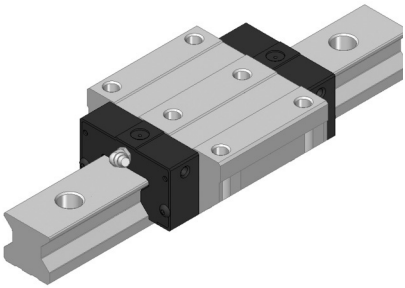

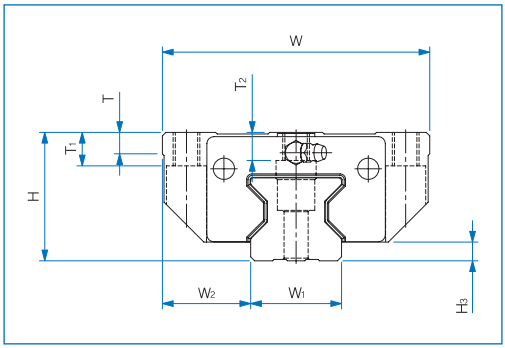

Model No.	External dimensions			Dimensions of block															H3
	Height H	Width W	Length L	B	C	C_2	M	L_1	T	T_1	T_2	N	E	θ_1	N_1	θ_2	Grease nipple		
R 25FN	36	70	92.2	57	45	40	M8	63.3	7.5	9	6.7	5.5	12	6	5.5	15.2	B-M6F		6.5
R 25FL			110.2					81.3								24.2			
R 30FN	42	90	103.8	72	52	44	M10	71	8	11	8	6.5	12	6	6	16			7
R 30FL			126.6					93.8								27.4			
R 35FN	48	100	118.3	82	62	52	M10	79.5	8	12.5	10.5	7.6	12	12	7.6	16			7
R 35FL			142.3					103.5								28			
R 45FN	60	120	146.3	100	80	60	M12	101.7	10	15	13.5	8	16	12	8	17.9			9.5
R 45FL			178.8					134.2								34.1			
R 55FN	70	140	168.6	116	95	70	M14	121.6	12	18	13.4	9	16	13.5	9	21.3			10
R 55FL			207.7					160.7								40.9			
R 65FN	90	170	207.2	142	110	82	M16	146.2	15	25	24	13.8	16	18.5	13.8	29.1			13
R 65FL			255.2					194.2								53.1			

Composition of Model Name & Number

R35	FN		SS	2	G_2	—	1000L	20/20		P		—	2
1	2	3	4	5	6		7	8	9	10	11		12

1 Model No.
2 Type of block : RN-Rectangular standard type / RL-Rectangular long type/ FN-Flange standard type / FL-Flange long type
3 No symbol-Standard block / E-Special block specification
4 Type of seal : SS-End seal+ Inside seal / ZZ-End seal+ Inside seal+ Metal scraper (*1)
5 Number of blocks assembled in one shaft
6 Symbol of clearance : No symbol-Normal preload / G_1-Light preload / G_2-Heavy preload / Gs-Special preload (*2)
7 Length of rail
8 Size of G value: standard G value has no symbol
9 No symbol-Rail counterbore type (top assembly) / A- Rail tap hole type (bottom assembly) (*3)
10 Symbol of precision : No symbol-Moderate / H-High / P-Precision / SP-Super precision / UP-Ultra precision (*4)
11 No symbol-Standard rail / E-special rail specification
12 Number of axes used in the same plane

(*1) See Symbol List of Optional Parts at page 101. (*2) See Radial Clearance at page 18.
(*3)) See Standard Tap Hole Type of Rail at page 93. (*4) See Selection of Precision Class at page 23.

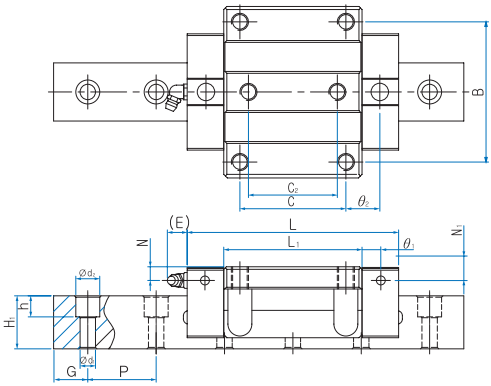

Unit : mm

Dimensions of rail						Basic load rating		Static allowance moment kN·m					Mass	
Width W_1 ±0.05	W_2	Height H_1	G	Pitch P	$d_1 x d_2 x h$	C kN	C_0 kN	Mp		My		Mr	Block kg	Rail kg/m
								1 block	Double blocks	1 block	Double blocks	1 block		
23	23.5	24	20	30	7x11x9.7	29.1	56.2	0.570	3.090	0.570	3.090	0.820	0.8	3.1
						35.6	73.1	0.925	4.949	0.925	4.949	1.065	1.1	
28	31	28	20	40	9x14x12	44.4	87.3	0.985	5.395	0.985	5.395	1.470	1.4	4.4
						55.0	114.8	1.640	8.946	1.640	8.946	1.935	1.9	
34	33	31	20	40	9x14x12	61.0	114.0	1.460	7.972	1.460	7.972	2.345	2.1	6.2
						75.6	150.0	2.450	13.036	2.450	13.036	3.090	2.8	
45	37.5	38	22.5	52.5	14x20x17	103.8	202.0	3.265	17.712	3.265	17.712	5.430	4.0	10.1
						132.3	276.2	5.840	30.565	5.840	30.565	7.440	5.3	
53	43.5	43.5	30	60	16x23x20	146.9	278.0	5.390	28.523	5.390	28.523	8.880	6.8	13.4
						181.9	380.3	8.960	49.534	8.960	49.534	11.690	8.9	
63	53.5	55	35	75	18x26x22	231.0	450.6	10.600	56.301	10.600	56.301	17.140	13.0	20.1
						303.0	576.0	18.160	91.519	18.160	91.519	21.910	17.2	

1N≒0.102kgf

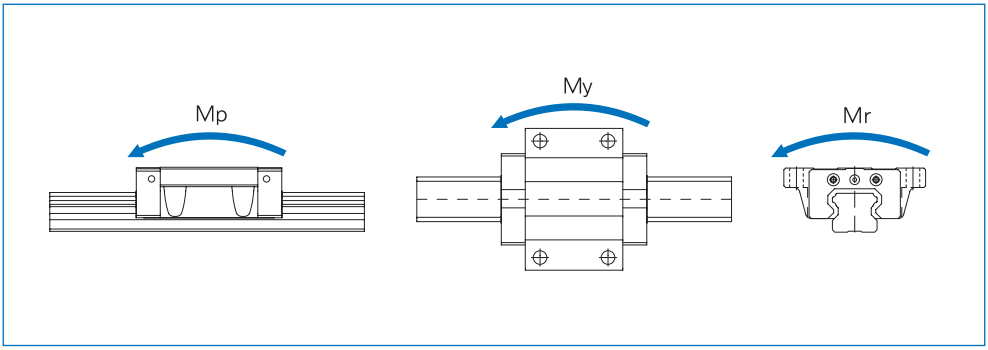

R-RN Series, R-RL Series

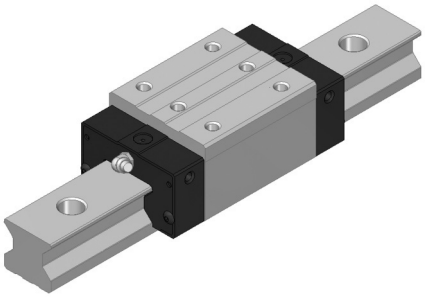

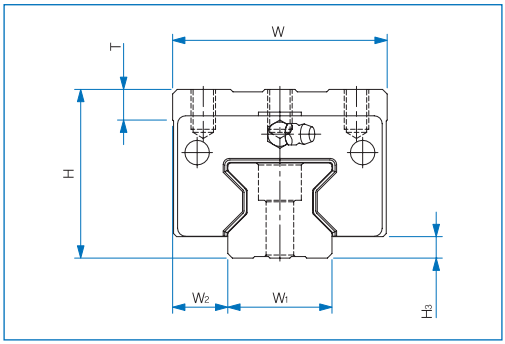

Model No.	External dimensions			Dimensions of block											H3
	Height H	Width W	Length L	B	C	M X ℓ	L1	T	N	E	θ1	N1	θ2	Grease nipple	
R 25RN	40	48	92.2	35	35	M6 x 9	63.3	9	9.5	12	6	9.5	20.2	B-M6F	6.5
R 25RL			110.2		50		81.3						21.7		
R 30RN	45	60	103.8	40	40	M8 x 11	71	9	9.5	12	6	9	22		7
R 30RL			126.6		60		93.8						23.4		
R 35RN	55	70	118.3	50	50	M8 x 13	79.5	12	14.6	12	12	14.6	22		7
R 35RL			142.3		72		103.5						23		
R 45RN	70	86	146.3	60	60	M10 x 20	101.7	20	18	16	12	18	27.9		9.5
R 45RL			178.8		80		134.2						34.1		
R 55RN	80	100	168.6	75	75	M12 x 19	121.6	20	19	16	13.5	19	31.3		10
R 55RL			207.7		95		160.7						40.9		

Composition of Model Name & Number

R35	RN		SS	2	G2	—	1000L	20/20		P		—	2
1	2	3	4	5	6		7	8	9	10	11		12

1 Model No.
2 Type of block : RN-Rectangular standard type / RL-Rectangular long type/ FN-Flange standard type / FL-Flange long type
3 No symbol-Standard block / E-Special block specification
4 Type of seal : SS-End seal+ Inside seal / ZZ-End seal+ Inside seal+ Metal scraper (*1)
5 Number of blocks assembled in one shaft
6 Symbol of clearance : No symbol-Normal preload / G1-Light preload / G2-Heavy preload / Gs-Special preload (*2)
7 Length of rail
8 Size of G value: standard G value has no symbol
9 No symbol-Rail counterbore type (top assembly) / A- Rail tap hole type (bottom assembly) (*3)
10 Symbol of precision : No symbol-Moderate / H-High / P-Precision / SP-Super precision / UP-Ultra precision (*4)
11 No symbol-Standard rail / E-special rail specification
12 Number of axes used in the same plane

(*1) See Symbol List of Optional Parts at page 101. (*2) See Radial Clearance at page 18.
(*3)) See Standard Tap Hole Type of Rail at page 93. (*4) See Selection of Precision Class at page 23.

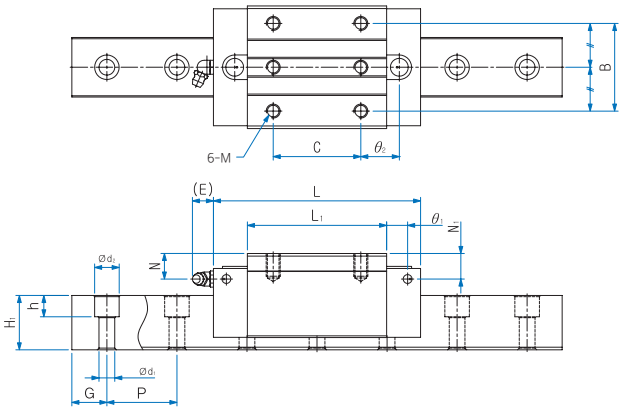

Unit : mm

Dimensions of rail						Basic load rating		Static allowance moment kN·m					Mass	
Width W1 ±0.05	W2	Height H1	G	Pitch P	d1xd2xh	C kN	Co kN	Mp		My		Mr	Block kg	Rail kg/m
								1 block	Double blocks	1 block	Double blocks	1 block		
23	12.5	24	20	30	7x11x9.7	29.1	56.2	0.570	3.090	0.570	3.090	0.820	0.7	3.1
						35.6	73.1	0.925	4.949	0.925	4.949	1.065	0.9	
28	16	28	20	40	9x14x12	44.4	87.3	0.985	5.395	0.985	5.395	1.470	1.2	4.4
						55.0	114.8	1.640	8.946	1.640	8.946	1.935	1.5	
34	18	31	20	40	9x14x12	61.0	114.0	1.460	7.972	1.460	7.972	2.345	2.0	6.2
						75.6	150.0	2.450	13.036	2.450	13.036	3.090	2.5	
45	20.5	38	22.5	52.5	14x20x17	103.8	202.0	3.265	17.712	3.265	17.712	5.430	3.9	10.1
						132.3	276.2	5.840	30.565	5.840	30.565	7.440	5.0	
53	23.5	43.5	30	60	16x23x20	146.9	278.0	5.390	28.523	5.390	28.523	8.880	6.2	13.4
						181.9	380.3	8.960	49.534	8.960	49.534	11.690	8.1	

1N≒0.102kgf

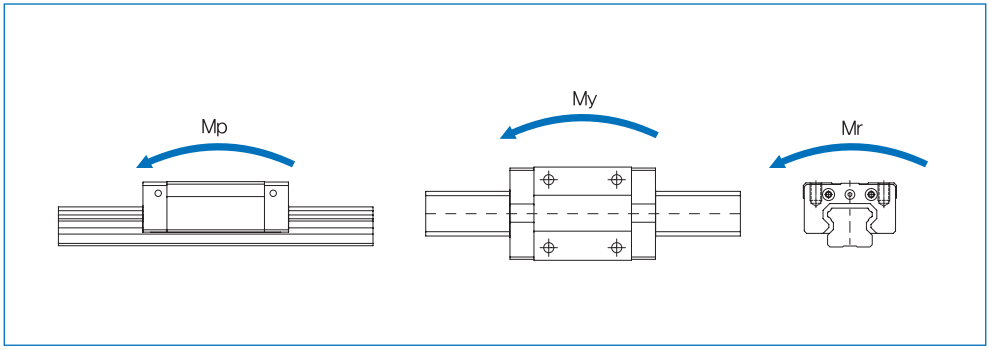

RS-RN Series, RS-RL Series

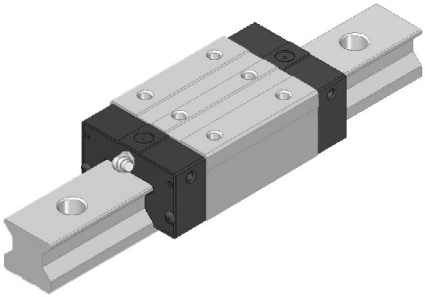

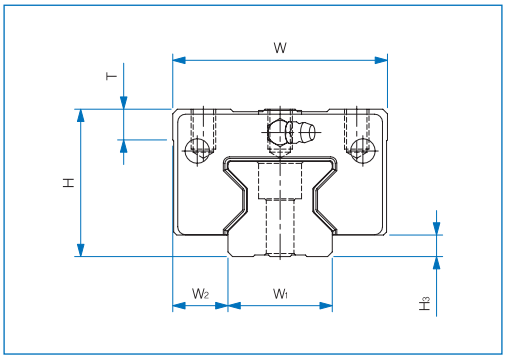

Model No.	External dimensions			Dimensions of block												H3
	Height H	Width W	Length L	B	C	M X ℓ	L_1	T	N	E	θ_1	N_1	θ_2	Grease nipple		
RS 25RN	36	48	92.2	35	35	M6 x 9	63.3	9	5.5	12	6	5.5	20.2	B-M6F		6.5
RS 25RL			110.2		50		81.3						21.7			
RS 35RN	48	70	118.3	50	50	M8 x 12	79.5	12	7.6	12	12	7.6	22			7
RS 35RL			142.3		72		103.5						23			
RS 45RN	60	86	146.3	60	60	M10 x 18	101.7	20	8	16	12	8	27.9			9.5
RS 45RL			178.8		80		134.2						34.1			
RS 55RN	70	100	168.6	75	75	M12 x 19	121.6	20	9	16	13.5	9	31.3			10
RS 55RL			207.7		95		160.7						40.9			
RS 65RN	90	126	207.2	76	70	M16 x 21	146.2	20	13.8	16	18.5	13.8	49.1			13
RS 65RL			255.2		120		194.2						48.1			

Composition of Model Name & Number

RS35	RN		SS	2	G2	—	1000L	20/20		P		—	2
1	2	3	4	5	6		7	8	9	10	11		12

1 Model No.
2 Type of block : RN-Rectangular standard type / RL-Rectangular long type
3 No symbol-Standard block / E-Special block specification
4 Type of seal : SS-End seal+ Inside seal / ZZ-End seal+ Inside seal+ Metal scraper (*1)
5 Number of blocks assembled in one shaft
6 Symbol of clearance : No symbol-Normal preload / G1-Light preload / G2-Heavy preload / Gs-Special preload (*2)
7 Length of rail
8 Size of G value: standard G value has no symbol
9 No symbol-Rail counterbore type (top assembly) / A- Rail tap hole type (bottom assembly) (*3)
10 Symbol of precision : No symbol-Moderate / H-High / P-Precision / SP-Super precision / UP-Ultra precision (*4)
11 No symbol-Standard rail / E-special rail specification
12 Number of axes used in the same plane

(*1) See Symbol List of Optional Parts at page 101. (*2) See Radial Clearance at page 18.
(*3)) See Standard Tap Hole Type of Rail at page 93. (*4) See Selection of Precision Class at page 23.

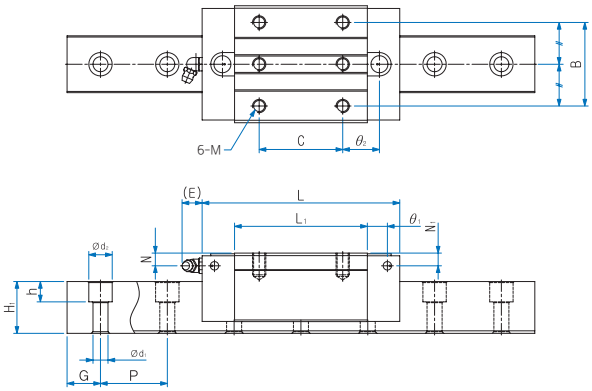

Unit : mm

Dimensions of rail						Basic load rating		Static allowance moment kN·m					Mass	
								Mp		My		Mr		
Width W_1 ±0.05	W_2	Height H_1	G	Pitch P	$d_1 x d_2 x h$	C kN	Co kN	1 block	Double blocks	1 block	Double blocks	1 block	Block kg	Rail kg/m
23	12.5	24	20	30	7x11x9.7	29.1	56.2	0.570	3.090	0.570	3.090	0.820	0.6	3.1
						35.6	73.1	0.925	4.949	0.925	4.949	1.065	0.8	
34	18	31	20	40	9x14x12	61.0	114.0	1.460	7.972	1.460	7.972	2.345	1.7	6.2
						75.6	150.0	2.450	13.036	2.450	13.036	3.090	2.1	
45	20.5	38	22.5	52.5	14x20x17	103.8	202.0	3.265	17.712	3.265	17.712	5.430	3.2	10.1
						132.3	276.2	5.840	30.565	5.840	30.565	7.440	4.2	
53	23.5	43.5	30	60	16x23x20	146.9	278.0	5.390	28.523	5.390	28.523	8.880	5.3	13.4
						181.9	380.3	8.960	49.534	8.960	49.534	11.690	6.8	
63	31.5	55	35	75	18x26x22	231.0	450.6	5.390	34.735	5.390	34.735	8.880	30.4	20.1
						303.0	576.0	8.960	60.425	8.960	60.425	11.690	33.6	

1N≒0.102kgf

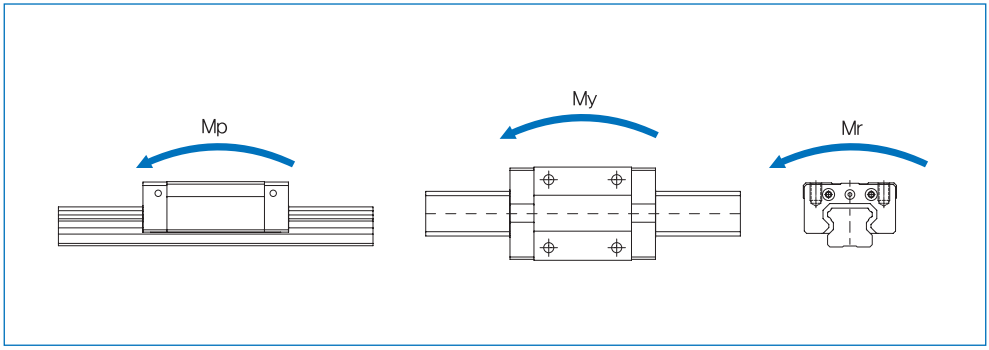

13 Options

1. Seal and rail cap

Item	Seal attachment position	Applied environments
End seal	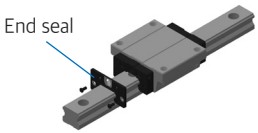	• Where there is a lot of dust or particles
Side seal	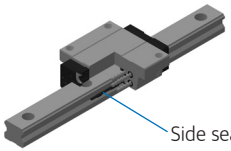	• Where foreign substance can easily flow in from the flank or bottom • Where the assembled linear motion guide moves in a vertical, horizontal, or reverse direction • Where there are a lot of cutting chips or foreign substance • Where cutting chips or foreign substances are highly likely to flow into a block
Inner seal	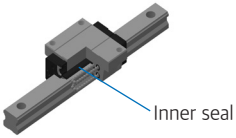	
LF seal	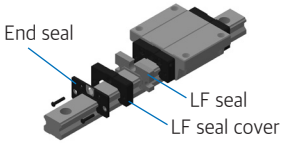	• Where a long interval of refilling is needed due to a narrow space • An environment at 40℃ or so • Where there needs to avoid any contact with organic solvents, such as thinner or milky white oil
Double seal	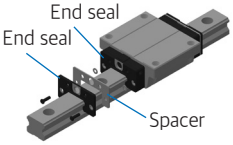	• Where strong sealing is needed due to a lot of dust or cutting chips
Metal scarper	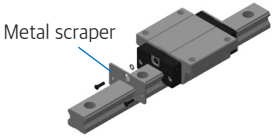	• Where spatters, such as slag or metal powder, arise in welding

Symbol List of Optional Parts

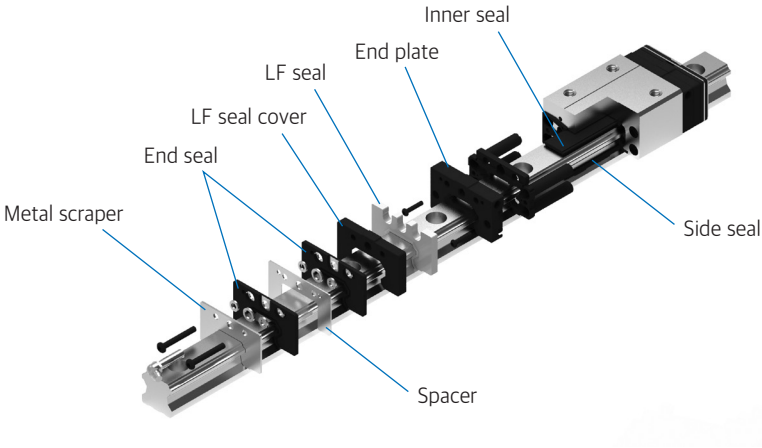

Symbol	Optional parts
UU	End seal
SS	Side seal+ Inner seal + End seal
DD	Side seal+ Inner seal + End seal+ Spacer+ End seal
ZZ	Side seal+ Inner seal + End seal+ Metal scraper
KK	Side seal+ Inner seal + End seal+ Spacer+ End seal+ Metal scraper
UULF	LF Unit+ End seal
SSLF	Side seal+ Inner seal + LF Unit+ End seal
DDLF	Side seal+ Inner seal + LF Unit+ End seal+ Spacer+ End seal
ZZLF	Side seal+ Inner seal + LF Unit+ End seal+ Metal scraper
KKLF	Side seal+ Inner seal + LF Unit+ End seal+ Spacer+ End seal+ Metal scraper

Optional-parts mapping table by model number

Model No.		Full ball type								Spacer ball chain type					Full roller type
		H		HB	S	HS		M	MB	H...S		HS...S		S...S	R
		15~35	45~55	17~35	15~25	25~35		5~20	5~15	25~35		25~35		15~25	25~65
End seal	UU	O	O	O	O	O	O	O	O	O	O	O	O	O	O
Side seal	-	O	O *1)	-	O	O	O *1)	-	-	O	O *1)	O	O *1)	O	-
Inner seal	-	O	O	-	O	O	O	-	-	O	O	O	O	O	-
Side seal +Inner seal +End seal	SS	O	O	O *2)	O	O	O	-	-	O	O	O	O	O	O *2)
Side seal +Inner seal +End seal +Metal scraper	ZZ	O	O	O	O	O	O	-	-	O	O	O	O	O	O *3)
Side seal +Inner seal +Double seal	DD	O	O	O	O	O	O	-	-	O	O	O	O	O	O *3)
Side seal +Inner seal +End seal +Metal scraper	KK	O	O	O	O	O	O	-	-	O	O	O	O	O	O *3)
LF seal +End seal	UULF	O	O	O	O	O	O	O	O	O	O	O	O	O	O *3)
LF seal +Side seal +Inner seal +End seal	SSLF	O	O	O	O	O	O	-	-	O	O	O	O	O	O *3)
LF seal +Side seal +Inner seal +Double seal	DDLF	O	O	O	O	O	O	-	-	O	O	O	O	O	O *3)
LF seal +Side seal +Inner seal +End seal +Metal scraper	ZZLF	O	O	O	O	O	O	-	-	O	O	O	O	O	O *3)
LF seal +Side seal +Inner seal +Double seal +Metal scraper	KKLF	O	O	-	O	O	O	-	-	O	O	O	O	O	O *3)

*1) In H,HS, H...S, and HS...S Series, the basic optional part of model no. 30 and no. 35 is Inner Seal.
*2) In H Series (model no. 45 and no. 55) and HB Series and R Series, Side Seal and Inner Seal is an integral type.
*3) In R Series, if it is necessary to apply LF seal and metal scrapper, please contact us.

Dimension Table of the Installation of Optional Parts

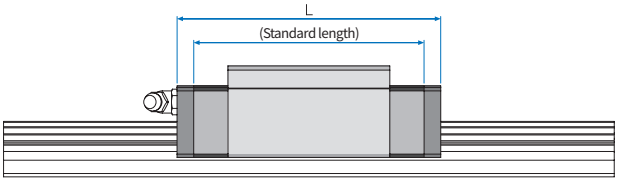

Unit:mm

Model No.		L									
		UU	SS	ZZ	DD	KK	UULF	SSLF	DDLF	ZZLF	KKLF
H	15 FN/RN/FN...S/RN...S	56.5	56.5	60.7	61.5	65.7	70.5	70.5	75.5	74.7	79.7
	15 FL/RL/FL...S/RL...S	64.8	64.8	69	69.8	74	78.8	78.8	83.8	83	88
	20 FN/RN/FN...S/RN...S	73.2	73.2	78.2	79.4	84.4	87.2	87.2	93.4	92.2	98.4
	20 FL/RL/FL...S/RL...S	89.1	89.1	94.1	95.3	100.3	103.1	103.1	109.3	108.1	114.3
	25 FN/RN/FN...S/RN...S	83.2	83.2	89.2	90.4	96.4	97.2	97.2	104.4	103.2	110.4
	25 FL/RL/FL...S/RL...S	103.1	103.1	109.1	110.3	116.3	117.1	117.1	124.3	123.1	130.3
	30 FN/RN/FN...S/RN...S	99.3	99.3	105.3	106.5	112.5	113.3	113.3	120.5	119.3	126.5
	30 FL/RL/FL...S/RL...S	121.5	121.5	127.5	128.7	134.7	135.5	135.5	142.7	141.5	148.7
	35 FN/RN/FN...S/RN...S	111.8	111.8	117.8	119	125	125.8	125.8	133	131.8	139
	35 FL/RL/FL...S/RL...S	137.2	137.2	143.2	144.4	150.4	151.2	151.2	158.4	157.2	164.4
	45 FN/RN/FN...S/RN...S	139	139	148.9	-	-	154	154	-	163.9	-
	45 FL/RL/FL...S/RL...S	170.8	170.8	180.7	-	-	185.8	185.8	-	195.7	-
	55 FN/RN/FN...S/RN...S	163	163	172.9	-	-	179	179	-	188.9	-
	55 FL/RL/FL...S/RL...S	201.1	201.1	211	-	-	217.1	217.1	-	227	-
HB	17 F/R	51	51	54.6	-	-	61.2	61.2	-	64.8	-
	21 F/R	59	59	63.4	-	-	69.2	69.2	-	73.6	-
	27 F/R	72.5	72.5	76.9	-	-	85.1	85.1	-	89.5	-
	35 F/R	105.3	105.3	110.9	-	-	120.3	120.3	-	125.9	-
S	15 FC/RC/FC...S/RC...S	39.8	39.8	44	44.8	49	53.8	53.8	58.8	58	63
	15 FN/RN/FN...S/RN...S	56.5	56.5	60.7	61.5	65.7	70.5	70.5	75.5	74.7	79.7
	20 FC/RC/FC...S/RC...S	47.8	47.8	52.8	54	59	61.8	61.8	68	66.8	73
	20 FN/RN/FN...S/RN...S	66.8	66.8	71.8	73	78	80.8	80.8	87	85.8	82
	25 FC/RC/FC...S/RC...S	59.4	59.4	65.4	66.6	72.6	73.4	73.4	80.6	79.4	86.6
	25 FN/RN/FN...S/RN...S	83.2	83.2	89.2	90.4	96.4	97.2	97.2	104.4	103.2	110.4
HS	25 RN/RN...S	83.2	83.2	89.2	90.4	96.4	97.2	97.2	104.4	103.2	110.4
	25 RL/RL...S	103.1	103.1	109.1	110.3	116.3	117.1	117.1	124.3	123.1	130.3
	30 RN/RN...S	99.3	99.3	105.3	106.5	112.5	113.3	113.3	120.5	119.3	126.5
	30 RL/RL...S	121.5	121.5	127.5	128.7	134.7	135.5	135.5	142.7	141.5	148.7
	35 RN/RN...S	111.8	111.8	117.8	119	125	125.8	125.8	133	131.8	139
	35 RL/RL...S	137.2	137.2	143.2	144.4	150.4	151.2	151.2	158.4	157.2	164.4

Unit:mm

Model No.		L	
		UU	UULF
M	5 C	17	21.4
	5 N/NA	20	24.4
	7 C	19.8	24.8
	7 N	24.3	29.3
	7 L/LA	31.8	36.8
	9 C	22.4	27.4
	9 N	31.3	36.3
	9 L/LA	41.4	46.4
	12 C	26.4	32.4
	12 N	34.9	40.9
	12 L	45.4	51.4
	15 C	34.4	41.4
	15 N	44.4	51.4
	15 L	59.4	66.4
	20 C	39.8	46.8
	20 N	51.8	58.8
	20 L	69.8	76.8

Unit:mm

Model No.		L	
		UU	UULF
MB	5C	21	25.4
	5N	25	29.4
	7C	24	29
	7N	33	38
	7L	43.5	48.5
	9C	28.1	33.1
	9N	40.2	45.2
	9L	52	57
	12C	31.1	37.1
	12N	44.5	50.5
	12L	59.7	65.7
	13C	35.3	42.3
	13N	49.2	56.2
	13L	68.6	75.6
	15C	42.8	49.8
	15N	56.6	63.6
	15L	75.8	82.8

2. Oil inlet

In R Series, it is possible to refill on the side and top. The standard specification of an oil inlet is 'not run through', in order to prevent foreign substances from flowing in a block. For use, please contact WON ST
When performing direct penetration machining for lubrication access on the top surface, please consider the following:
Be aware that there is an unperforated small hall in the top surface O-ring groove for lubrication.
Heat a metal tip with a diameter of 0.8mm and melt the small hall while penetrating it.
Ensure the metal tip penetrates to a depth of 1~2mm after making contact with the small hall.
Drill work may lead to contamination of the internal lubrication pathways

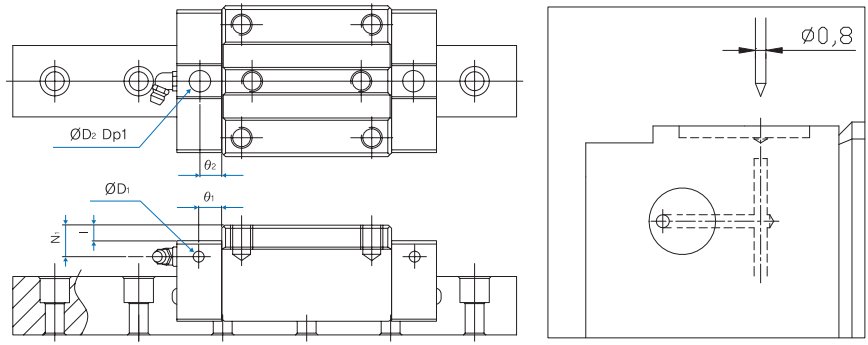

Unit : mm

Model No.		Hole for a side nipple			Top oil inlet			
		θ_1	N_1	D_1	D_2	(O-ring)	I	θ_2
R	25F(L)	6	5.5	3.3	10.2	P7	0.4	6
	30F(L)	6	6	5.1	10.2	P7	0.4	6.5
	35F(L)	12	7.6	5.1	10.2	P7	0.4	7.25
	45F(L)	12	8	5.1	10.2	P7	0.4	7
	55F(L)	13.5	9	5.1	10.2	P7	0.4	8
	65F(L)	18.5	13.75	5.4	10.2	P7	0.4	11
	25R(L)	6	9.5	3.3	10.2	P7	4.4	6
	30R(L)	6	9	5.1	10.2	P7	3.4	6.5
	35R(L)	12	14.6	5.1	10.2	P7	7.4	7.25
	45R(L)	12	18	5.1	10.2	P7	10.4	7
	55R(L)	13.5	19	5.1	10.2	P7	10.4	8
RS	25R(L)	6	5.5	3.3	10.2	P7	0.4	6
	35R(L)	12	7.6	5.1	10.2	P7	0.4	7.25
	45R(L)	12	8	5.1	10.2	P7	0.4	7
	55R(L)	13.5	9	5.1	10.2	P7	0.4	8
	65R(L)	18.5	13.75	5.4	10.2	P7	0.4	11

3. Grease nipple

WON ST provides various types of grease nipples necessary for lubricating a linear motion system.

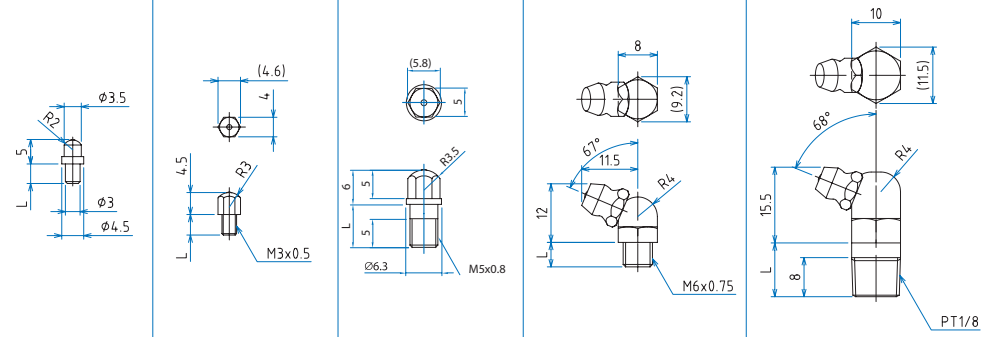

A-Ø3	A-M3	A-M5	B-M6F	B-PT1/8

Applied model no.	Nipple model no.	Thread (L) length									
		UU	SS	DD	ZZ	KK	UULF	SSLF	DDLF	ZZLF	KKLF
HB17, HB21	A-Ø3	4	4	-	6.5	-	9	9	-	11	-
M15, M20,MB13,MB15	A-M3	4.2	4.2	-	-	-	7.7	7.7	-	-	-
S-H15	A-M5	5	5	7.5	7.5	10	12	12	14.5	14.5	17
S-H20	B-M6F	7	7	10	10	12	14.5	14.5	17	17	19
S-H25		7	7	10	10	14.5	14.5	14.5	17	17	22
H30		7	7	12	12	14.5	14.5	14.5	19	19	22
H35		10	10	14.5	14.5	17	17	17	19	19	22
HB27		5	5	-	7	-	12	12	-	14.5	-
R25, 30, 35, 45, 55, 65		-	5	-	-	-	-	-	-	-	-
H45, H55	B-PT 1/8	8	8	-	11	-	15.5	15.5	-	18	-

4. Connection of oil pipes

WOL Type

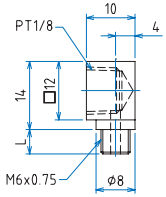

WOL-A

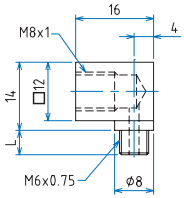

WOL-B

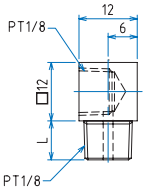

WOL-C

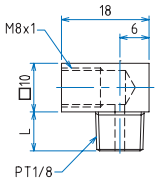

WOL-D

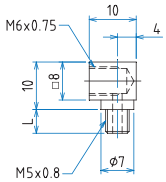

WOL-E

WOS Type

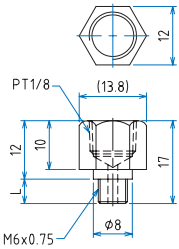

WOS-A

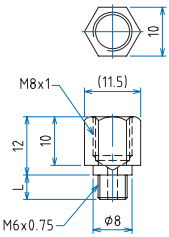

WOS-B

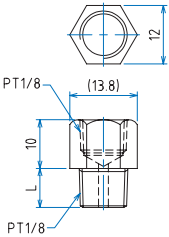

WOS-C

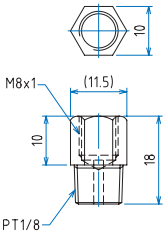

WOS-D

Applied model no.	Nipple model no.	Thread (L) length									
		UU	SS	DD	ZZ	KK	UULF	SSLF	DDLF	ZZLF	KKLF
S-H15	WOL-E	5	5	7.5	7.5	10	12	12	14.5	14.5	17
S-H20	WOS-B	7	7	10	10	12	14.5	14.5	17	17	19
S-H25	WOL-A, WOL-B WOS-A, WOS-B	7	7	10	10	14.5	14.5	14.5	17	17	22
H30		7	7	12	12	14.5	14.5	14.5	19	19	22
H35		10	10	14.5	14.5	17	17	17	19	19	22
HB27		5	5	-	7	-	12	12	-	14.5	-
HB35		5	5	-	10	-	12	12	-	17	-
H45, H55	WOL-C, WOL-D WOS-C, WOS-D	8	8	-	11	-	15.5	15.5	-	18	-

5. How to install with the use of a support rail

To get a block of a linear motion guide in or out of a rail, it is required to use a support rail for safety. If a rail is mounted on a rail without any support rail, a rolling element can be separated from the block. Moreover, internal parts can be damaged or destroyed by foreign substances.
Installing a block without a rolling element may sharply shorten life of the block, reduce load, and cause early destruction.
If you use a support rail, do not lean it. Adhere it to the end of a rail first and then push it in the rail direction by apply force gradually. If a block has a rolling element separated and gets contaminated by dust, please do not use the product but contact WON ST.

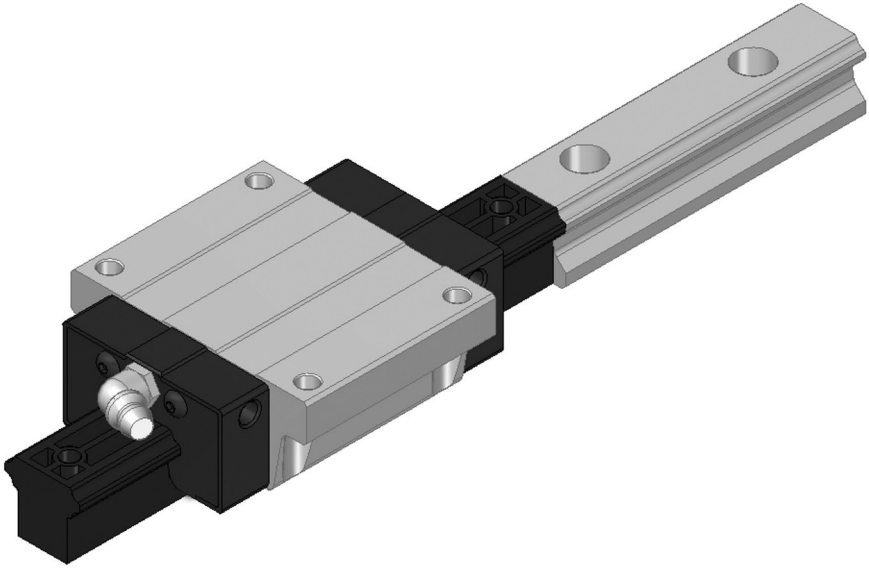

14 Precautions for Handling Linear Motion Guide

1. Handling

1) WON Linear Motion Guide is damp-proof packaged after grease removal and cleaning. So, please open it right before use.
2) As for the compatible product of rail and block, a plastic support rail is combined with the block. Please assemble it with the rail carefully.
3) If you reassemble a block-rail set product or a single block product after dismantling it into pieces, foreign substance may intrude into the block or cause performance degradation that leads to unsmooth rolling motion or damage. So please do not disassemble it at your discretion.
4) If either a rail or a block leans to one side, the block or rail may fall to be damaged. Please be careful not to get a block or rail separated.
5) A block' end plate is made of plastic. Imposing an impact on it may cause its damage. Please be careful

2. Lubrication

1) If the product supplied is coated with rust preventive oil, clean it off thoroughly first and then fill with a lubricant before use.
2) DO NOT mix with other lubricants with a different thickener or additive. If so, it may destroy the structure of grease or cause a harmful effect.
3) Viscosity of grease depends on temperature. It increases in winter due to low temperature, and friction of a linear motion guide resistance may increase.
4) If you need to use a special lubricant, please contact WON ST before use.
5) When you use oil as a lubricant, oil may fail to reach the raceway groove depending on the assembly status or direction of a block or rail. In this case, there is no lubrication effect. WON ST offers different lubrication methods suitable for assembly environments. So please contact us.

3. Caution for use

1) After opening the product, please put a damp-proof agent in a dry container for storage.
2) Please handle the product after wearing plastic gloves in a clean place.
3) Please be careful to prevent foreign substances that may impede rolling motion or cause functional damage.
4) Please use a holding door or cover to prevent a linear motion guide from being exposed directly to poor environments that may cause corrosion or damage.
5) As for the linear motion guide based on standard plastic end plate, use it at 80℃ or below. If you need to use it at 80℃ or above, please order a special metal end plate.
6) If rail of a linear motion guide is fixed at ceiling or in a high place and its block bears load downwards, it is possible for the block to be separated from the rail and for the block and its attached parts to fall as the end plate is damaged or a ball falls off. So, it is required to take safety measures, such as the installation of a safety device.

4. Storage

A rail may warp depending on a storage condition. For storage, place a linear motion guide horizontally in the package box offered by WON ST or its equivalent box with the flat bottom. Avoid a place with high or low temperature and high humidity.

Troubles and Troubleshooting of Linear Motion Guide

Type	Trouble	Cause	Action
Fatigue failure of the rolling surface	• Flacking - Caused by rolling fatigue of the rolling surface - Maximum shear stress-induced internal cracks are expressed on the surface.	Damage by life	Replace the linear motion guide.
		Overload	Review the model no. selected; Use a higher model no; Lower a level of load; Reinforce assembly precision for installation; Enhance the rigidity of base and table
		Poor lubrication	Refill a lubricant; Shorten a refilling cycle of lubricant; Review the lubricant in use; Improve the lubricant passage.
		Intrusion of foreign substances	Improve seal performance; Add a seal; Take additio nal measures for dust prevention.
Indentation of the rolling surface	• Indentation - Caused by plastic deformation of the rolling surface due to excessive external load	Impact load or excessive external load	Review the model no. selected; Make service conditions less strict; Lower a level of load; Reinforce assembly precision for installation; Use a higher model no.
		Careless handling	Improve the methods and conditions of handling to prevent impact and fall.
Seizing	• Burning - Rough surface of the rolling surface due to slight burning by friction between a rolling element and the rolling surface - Cause for the discoloration of the rolling surface, weakened hardness, and flaking	Poor lubrication	Refill a lubricant; Use an appropriate lubricant; Improve lubrication
		Overload	Review service conditions; Lower a level of load; Use a higher model no.; Enhance assembly precision for installation.
Cracking	• Cracking - Partial breaking into pieces of a rolling element or rolling surface due to excessive external load	mpact load or excessive external load	Review the model no. selected; Use a higher model no.; Lower a level of load; Reinforce assembly precision for installation
		Poor raceway circulation of a rolling element	Prevent foreign substances; Improve measures for dust prevention; Refill a lubricant; Shorten a refilling cycle of lubricant; Improve lubrication
Abnormal wear	• Abnormal wear - Caused by the sliding of a rolling element and the rolling surface; the more sliding, the rapidly more wear - Accompany oxidation wear causing poor precision and preload failure	Impact load or excessive external load	Review the model no. selected; Use a higher model no.; Lower a level of load; Reinforce assembly precision for installation.
		Intrusion of foreign substances	Reinforce seal performance; Improve measures for dust prevention
		Poor lubrication	Refill a lubricant; Use an appropriate lubricant; Improve lubrication; Improve the lubrication passage.
Flatting corrosion	• Vibration - This problem arises when running at vibrant stroke causes the loss of oil film, and the oxidation of the fine dust caused by the sliding of a rolling element and the rolling surface facilitates wear.	Load	Review service conditions; Use a higher model no.; Reinforce assembly precision for installation.
		Vibration	Improve transfer conditions; Replace a lubricant; Improve lubrication; Shorten a refilling cycle of lubricant.
		Intrusion of foreign substances	Improve a seal; Establish measures for dust prevention.
Rust generation	• Rust - Caused by the loss of oil film or the contact of an exposed part with water, acid, and alkali. In particular, when cooling water flows in a block, it degrades lubrication and causes rust. Early flaking arises due to concentrated stress.	Intrusion of cooling water	Apply surface treatment for rust prevention; Improve seal performance; Replace a lubricant; replace a coolant; Refill a lubricant; Shorten a refilling cycle of lubricant.
		High humidity	Apply surface treatment for rust prevention; Improve environments.
		Poor handling	Improve a storage place; Reinforce sealing treatment; Apply a sufficient amount of rust preventive oil.

<Table of comparison with the full ball type products made by different manufacturers>

1. H Series (Standard Type)

WON	THK	NSK	PMI	HIWIN
H 15FN H 15FL	HSR 15A, B, C HSR 15LC	LH 15EL, EM LH 15GL, GM	MSA 15A	HGW 15CA
H 20FN H 20FL	HSR 20A, B, C HSR 20LA, LB, LC	LH 20EL, EM LH 20GL, GM	MSA 20A MSA 20LA	HGW 20CA HGW 20HA
H 25FN H 25FL	HSR 25A, B, C HSR 25LA, LB, LC	LH 25EL, EM LH 25GL, GM	MSA 25A MSA 25LA	HGW 25CA HGW 25HA
H 30FN H 30FL	HSR 30A, B, C HSR 30LA, LB, LC	LH 30EL, EM LH 30GL, GM	MSA 30A MSA 30LA	HGW 30CA HGW 30HA
H 35FN H 35FL	HSR 35A, B, C HSR 35LA, LB, LC	LH 35EL, EM LH 35GL, GM	MSA 35A MSA 35LA	HGW 35CA HGW 35HA
H 45FN H 45FL	HSR 45A, B, C HSR 45LA, LB, LC	LH 45EL, EM LH 45GL, GM	MSA 45A MSA 45LA	HGW 45CA HGW 45HA
H 55FN H 55FL	HSR 55A, B, C HSR 55LA, LB, LC	LH 55EL, EM LH 55GL, GM	MSA 55A MSA 55LA	HGW 55CA HGW 55HA
H 15RN H 15RL	HSR 15R HSR 15LR	LH 15AN, AL LH 15BL, BL	MSA 15S	HGH 15CA
H 20RN H 20RL	HSR 20R HSR 20LR	LH 20AN, AL LH 20BN, BL	MSA 20S MSA 20LS	HGH 20CA HGH 20HA
H 25RN H 25RL	HSR 25R HSR 25LR	LH 25AN, AL LH 25BN, BL	MSA 25S MSA 25LS	HGH 25CA HGH 25HA
H 30RN H 30RL	HSR 30R HSR 30LR	LH 30AN, AL LH 30BN, BL	MSA 30S MSA 30LS	HGH 30CA HGH 30HA
H 35RN H 35RL	HSR 35R HSR 35LR	LH 35AN, AL LH 35BN, BL	MSA 35S MSA 35LS	HGH 35CA HGH 35HA
H 45RN H 45RL	HSR 45R HSR 45LR	LH 45AN, AL LH 45BN, BL	MSA 45S MSA 45LS	HGH 45CA HGH 45HA
H 55RN H 55RL	HSR 55R HSR 55LR	LH 55AN, AL LH 55BN, BL	MSA 55S MSA 55LS	HGH 55CA HGH 55HA

2. HW Series (Wide Type)

WON	THK	NSK	PMI	HIWIN	IKO
HB 17F	HRW 17CA	LW 17EL	-	WEW 17CC	LWFF 33
HB 21F	HRW 21CA	LW 21EL	MSG 21E	WEW 21CC	LWFF 37
HB 27F	HRW 27CA	LW 27EL	MSG 27E	WEW 27CC	LWFF 42
HB 35F	HRW 35CA	LW 35EL	MSG 35E	WEW 35CC	LWFF 69
HB 17R	HRW 17CR	-	-	WEH 17CA	LWFS 33
HB 21R	HRW 21CR	-	MSG 21S	WEH 21CA	LWFS 37
HB 27R	HRW 27CR	-	MSG 27S	WEH 27CA	LWFS 42
HB 35R	HRW 35CR	-	MSG 35S	WEH 35CA	-

S Series (Slim Type)

WON	THK	NSK	PMI	HIWIN
S 15RC S 15RN	SR 15V SR 15W	LS 15CL LS 15AL	MSB 15TS MSB 15S	EGH 15SA EGH 15CA
S 20RC S 20RN	SR 20V SR 20W	LS 20CL LS 20AL	MSB 20TS MSB 20S	EGH 20SA EGH 20CA
S 25RC S 25RN	SR 25V SR 25W	LS 25CL LS 25AL	MSB 25TS MSB 25S	EGH 25SA EGH 25CA
S 15FC S 15FN	SR 15SB SR 15TB	LS 15EM LS 15JM	MSB 15TE MSB 15E	EGW 15CA EGW 15CB
S 20FC S 20FN	SR 20SB SR 20TB	LS 20EM LS 20JM	MSB 20TE MSB 20E	EGW 20CA EGW 20CB
S 25FC S 25FN	SR 25SB SR 25TB	LS 25EM LS 25JM	MSB 25TE MSB 25E	EGW 25CA EGW 25CB

4. M Series (Miniature Standard Type)

WON	THK	NSK	PMI	HIWIN	IKO
M 5C	SRS 5GM	-	-	MGN 5C	LWLC 5
M 5N	SRS 5GN	LU 05TL	-	-	LWL 5
M 7C	SRS 7GS	-	-	-	LWLC 7
M 7N	SRS 7GM	LU 07AL	MSC 7M	MGN 7C	LWL 7
M 7L	SRS 7GN	-	MSC 7LM	MGN 7H	-
M 7LA	-	-	-	-	LWLG 7
M 9C	SRS 9GS	-	-	-	LWLC 9
M 9N	SRS 9GM	LU 09TL	MSC 9M	MGN 9C	LWL 9
M 9L	SRS 9GN	LU 09UL	MSC 9LM	MGN 9H	-
M 9LA	-	-	-	-	LWLG 9
M 12C	SRS 12GS	-	-	-	LWLC 12
M 12N	SRS 12GM	LU 12TL	MSC 12M	MGN 12C	LWL 12
M 12L	SRS 12GN	LU 12UL	MSC 12LM	MGN 12H	LWLG 12
M 15C	SRS 15GS	-	-	-	LWLC 15
M 15N	SRS 15GM	LU 15AL	MSC 15M	MGN 15C	LWL 15
M 15L	SRS 15GN	LU 15BL	MSC 15LM	MGN 15H	LWLG 15
M 20C	-	-	-	-	LWLC 20
M 20N	SRS 20GM	-	-	-	LWL 20
M 20L	-	-	-	-	LWLG 20

MB Series (Miniature Wide Type)

WON	THK	NSK	PMI	HIWIN	IKO
MB 5C	SRS 5WGM	-	-	-	LWLFC 10
MB 5N	SRS 5WGN	LE 05AL	-	-	LWLF 10
MB 7C	SRS 7WGS	-	-	-	LWLFC 14
MB 7N	SRS 7WGM	LU 07TL	MSD 7M	MGW 7C	LWLF 14
MB 7L	SRS 7WGN	-	MSD 7LM	MGW 7H	LWLFG 14
MB 9C	SRS 9WGS	-	-	-	LWLFC 18
MB 9N	SRS 9WGM	LE 09TL, TR	MSD 9M	MGW 9C	LWLF 18
MB 9L	SRS 9WGN	-	MSD 9LM	MGW 9H	LWLFG 18
MB 12C	SRS 12WGS	-	-	-	LWLFC 24
MB 12N	SRS 12WGM	LE 12AL, AR	MSD 12M	MGW 12C	LWLF 24
MB 12L	SRS 12WGN	-	MSD 12LM	MGW 12H	LWLFG 24
MB 15C	SRS 15WGS	-	-	-	LWLFC 42
MB 15N	SRS 15WGM	LE 15AL, AR	MSD 15M	MGW 15C	LWLF 42
MB 15L	SRS 15WGN	-	MSD 15LM	MGW 15H	LWLFG 42

<Table of model number comparison with spacer chain type of a different company>

1. H...S Series(Standard Type)

WON	THK	NSK	PMI	HIWIN
H 15FN...S H 15FL...S	SHS 15C SHS 15LC	SH 15FL SH 15HL	SME 15EA SME 15LEA	QHW 15CA -
H 20FN...S H 20FL...S	SHS 20C SHS 20LC	SH 20FL SH 20HL	SME 20EA SME 20LEA	QHW 20CA QHW 20HA
H 25FN...S H 25FL...S	SHS 25C SHS 25LC	SH 25FL SH 25HL	SME 25EA SME 25LEA	QHW 25CA QHW 25HA
H 30FN...S H 30FL...S	SHS 30C SHS 30LC	SH 30FL SH 30HL	SME 30EA SME 30LEA	QHW 30CA QHW 30HA
H 35FN...S H 35FL...S	SHS 35C SHS 35LC	SH 35FL SH 35HL	SME 35EA SME 35LEA	QHW 35CA QHW 35HA
H 45FN...S H 45FL...S	SHS 45C SHS 45LC	SH 45FL SH 45HL	SME 45EA SME 45LEA	QHW 45CA QHW 45HA
H 55FN...S H 55FL...S	SHS 55C SHS 55LC	SH 55FL SH 55HL	- -	- -
H 15RN...S H 15RL...S	SHS 15R -	SH 15AN SH 15BN	SME 15SA SME 15LSA	QHH 15CA -
H 20RN...S H 20RL...S	SHS 20V SHS 20LV	SH 20AN SH 20BN	SME 20SA SME 20LSA	QHH 20CA QHH 20HA
H 25RN...S H 25RL...S	SHS 25R SHS 25LR	SH 25AN SH 25BN	SME 25SA SME 25LSA	QHH 25CA QHH 25HA
H 30RN...S H 30RL...S	SHS 30R SHS 30LR	SH 30AN SH 30BN	SME 30SA SME 30LSA	QHH 30CA QHH 30HA
H 35RN...S H 35RL...S	SHS 35R SHS 35LR	SH 35AN SH 35BN	SME 35SA SME 35LSA	QHH 35CA QHH 35HA

2. S...S Series(Slim Type)

WON	THK	NSK	PMI	HIWIN
S 15RC...S S 15RN...S	SSR 15XV SSR 15XW	SS 15CL SS 15AL	SME 15EB SME 15LEB	QEH 15SA QEH 15CA
S 20RC...S S 20RN...S	SSR 20XV SSR 20XW	SS 20CL SS 20AL	SME 20EB SME 20LEB	QEH 20SA QEH 20CA
S 25RC...S S 25RN...S	SSR 25XV SSR 25XW	SS 25CL SS 25AL	SME 25EB SME 25LEB	QEH 25SA QEH 25CA
S 15FC...S S 15FN...S	- SSR 15XTB	SS 15JM SS 15EM	SME 15SB SME 15LSB	QEW 15SA QEW 15CA
S 20FC...S S 20FN...S	- SSR 20XTB	SS 20JM SS 20EM	SME 20SB SME 20LSB	QEW 20SA QEW 20CA
S 25FC...S S 25FN...S	- SSR 25XTB	SS 25JM SS 25EM	SME 25SB SME 25LSB	QEW 25SA QEW 25CA

3. HS...S Series(Slim Type)

WON	THK
HS 25RN...S HS 25RL...S	SHS 25V SHS 25LV
HS 30RN...S HS 30RL...S	SHS 30V SHS 30LV
HS 35RN...S HS 35RL...S	SHS 35V SHS 35LV

Crossed Roller Bearing
Contents

1 Structure and Features of WON Crossed Roller Bearing

1. Structure

WON Crossed Roller Bearing has the structure in which a roller as a rolling element is crossed at right angles with the rolling surface with the V-grooved inner ring and outer ring. A spacer-type retainer assembled between rollers prevents the collision and friction of rollers, and the increase in rotational torque. The device has an easy-to-use compact structure.

2. Features

In the rolling surface of the inner and outer rings of a crossed roller bearing, rollers are assembled. Therefore, the device reduces the elastic displacement by external load, and bears all complex loads, such as radial load, axial load, and moment load, at the same time. Since it adopts a spacer retainer, it avoids inclined surface of a roller, uneven wear caused by uneven contact, or hitching. Therefore, the product with high precision and high rigidity implements smooth rotary motion, and support preload adjustment differently depending on service conditions.

3. Use

This product is mainly usable in an environment that needs complex loads, high rigidity and rotational precision. It is applied to various types of equipment, such as industrial robot, machine tool index table, ATC, medical equipment, precise alignment stage, semiconductor manufacture equipment, and DD motor.

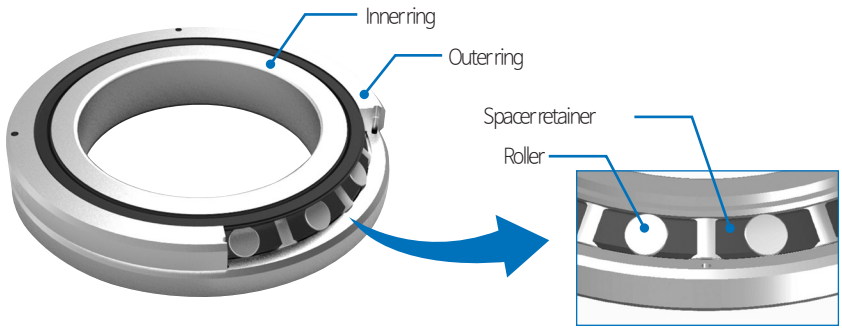

Figure 1. Structure of Crossed Roller Bearing

2 Types of Crossed Roller Bearing

1. CB Series for Revolving Inner Ring

1) The inner ring of a crossed roller bearing has an integral type, and its outer ring is separable into upper and lower parts that are bolted for easy handling.
2) This model is mainly applied to the parts that needs the rotational precision of its inner ring, such as the index table of machine tool, or the joint or turning part of industrial robot.

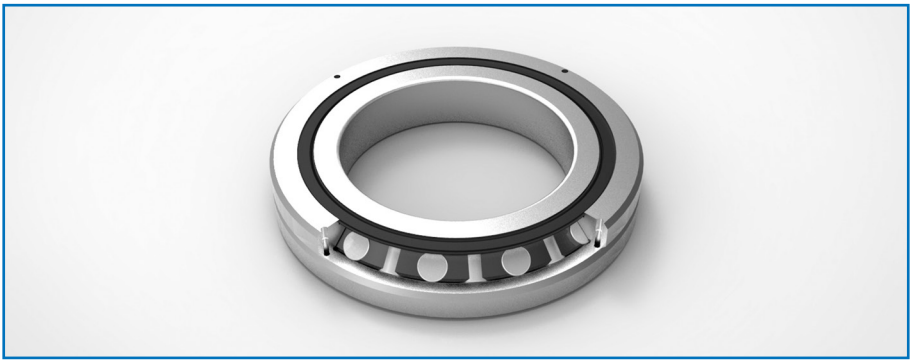

2. CH Series with High Stiffness

1) The inner and outer rings of a crossed roller bearing have an integral type, so that the device has a small installation error. In addition, this model with high precision and high rigidity secures stablerotational precsion.
2) This model is used in an environment where its inner and outer rings need to be rotated simultaneously or individually

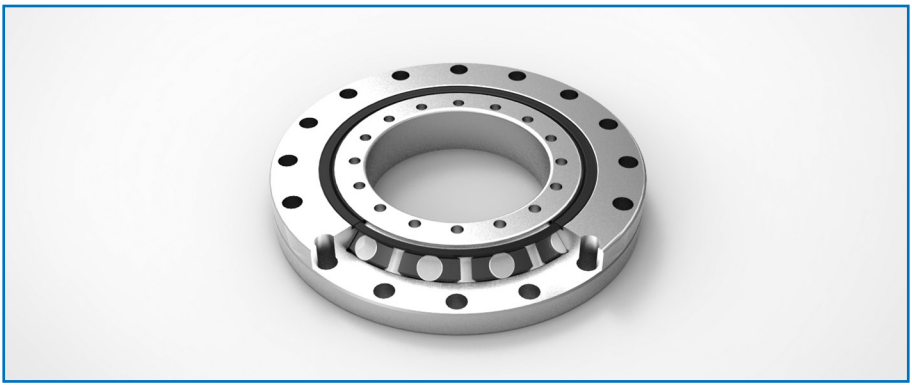

3. CA Series for Slim Revolving Inner Ring

1) As a slim compact type, this model has minimum thickness of its inner and outer rings. Its inner ring has an integral type, and its outer ring is separable into upper and lower parts that are bolted for easy handling.
2) This model is mainly applied to the parts that needs the rotational precision of its inner ring and need to become light weight and small, such as the joint or turning part of industrial robot.

4. Customized Special Type CS Series

1) This is a customized model. If you need a special type in terms of the shape, size, material, and specification of the inner and outer rings, please contact WON ST.

3 Selection of Crossed Roller Bearing

1. Overview

To select a crossed roller bearing, it is necessary to identify the details of requirements, prioritize them, and then choose the one that meets the service conditions.

2. Procedure

1 Determine service conditions	The equipment to be used, requirements, service environments, precision, rigidity, life, and others
2 Select a type	Integral type, Inner ring separation type, Outer ring separation type, General type, High rigidity type
3 Calculate load	Calculate radial load, axial load, moment load, and dynamic equivalent load
4 Calculate rated service life	Calculate a rated service life
5 Calculate static safety factor	Calculate a static safety factor in consideration of the characteristics of equipment, external load, etc.
6 Determine rigidity and preload	Determine clearance and preload values in consideration of motion conditions, rotational precision, etc.
7 Determine precision level	Determine a level of precision in consideration of rotational precision and assembly precision.
8 Determine lubrication	Determine oil, grease, or a special lubricant.

9 Complete selection

4 Life Calculation

1. Rated service life (L)

It is possible to calculate the basic rated life of cross roller bearing in the following formula.

$$L = \left(\frac{f_T \cdot C}{f_W \cdot P_C}\right)^{\frac{10}{3}} \times 10^6$$

Service life time

$$L_h = \frac{L}{60 \times N}$$

L : Rated service life
C : Basic dynamic load rating (N)
P_C : Dynamic equivalent radial load (N)
f_T : Temperature factor
f_W : Load factor
L_h : Service life time (h)
N : RPM (rpm)

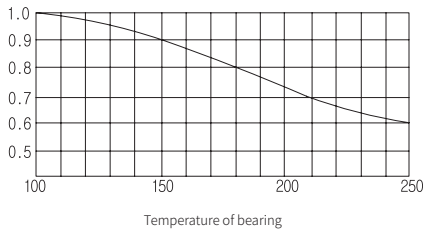

Figure 2. Temperature factor

※ Note: Usually, workable temperature is 80℃or below.
If above, please contact WON ST.

2. Life calculation under heaving operation condition

Service life of a bearing under heaving operation condition is calculated as follows.

$$L_{0c} = \frac{90}{\theta}\left(\frac{C}{P_c}\right)^P$$

L_{0c} : rated service life 10^6 cycle indicated in heaving frequency of the bearing under heaving operation

θ : heaving angle (See Fig.3.)

P_c : dynamic equivalent radial load

※ If Ø is small, it is hard to generate an oil film on the contact surface between the raceway surface and a rotating body. In addition, it may cause corrosion.

In case of heaving operation

Service life time

$$L_h = \frac{360 \times L}{2 \times \theta \times n_o \times 60}$$

L_h : Service life time (h)

θ : Heaving angle (deg)

(※See the figure on the right.)

n_o : Number of reciprocating motions (min-1)

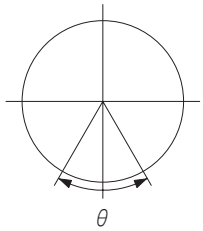

Figure 3.

3. Static safety factor (fs)

Static safety factor (fs) of a crossed roller bearing is calculated as follows. For the general static safety factor, see Table 1.

$$f_s = \frac{C_0}{P_0}$$

f_s : static safety factor

C_0 : basic static load rating (N)

P_0 : static equivalent radial load (maximum load) (N)

Table 1. Static safety factor (fs)

Working condition	Lower limit of fs
High rotational precision is required.	≥3
Under normal operation condition	≥2
Almost no rotation and no significance of smooth operation under normal operation condition	≥1

4. Static equivalent radial load (P_0)

Static equivalent radial load of a crossed roller bearing is calculated in the following formula.

$$P_0 = F_r + \frac{2M}{D_{PW}} + 0.44 F_a$$

P_0 : Static equivalent radial load (N)

F_r : Radial load N)

F_a : Axial load (N)

M : Moment (N • mm)

D_{PW} : Roller set pitch diameter ($D_{PW} \fallingdotseq \frac{d+D}{2}$)

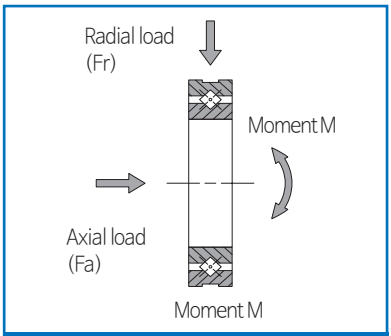

Figure 4. Bearing load

5. Dynamic equivalent radial load (P_c)

Dynamic equivalent radial load of a crossed roller bearing is calculated in the following formula.

$$P_c = X\left(F_r + \frac{2M}{D_{PW}}\right) + Y F_a$$

P_c : Dynamic equivalent radial load (N)

F_r : Radial load (N)

F_a : Axial load (N)

M : Moment (N • mm)

X : Radial load factor (See Table 2.)

Y : Axial load factor (See Table 2.)

D_{PW} : Roller set pitch diameter ($D_{PW} \fallingdotseq \frac{d+D}{2}$)

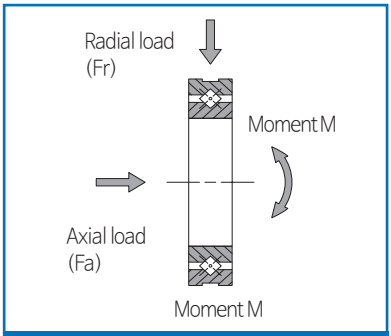

Figure 5.

Table 2. Radial load factor and axial load factor

Classification	X	Y
$\frac{F_a}{F_r + 2M/D_{PW}} \leq 1.5$	1	0.45
$\frac{F_a}{F_r + 2M/D_{PW}} > 1.5$	0.67	0.67

6. Load factor (f_W)

When a crossed roller bearing is used, the load imposed on the bearing by vibration and impacts in operation is often greater than the calculated load. To select a crossed roller bearing, it is required to take into account the load factor values in the table shown below.

Table 3. Load factor (fw)

Load condition	fw
Smooth operation condition without impacts	1 ~ 1.2
Normal operation condition	1.2 ~ 1.5
The operation condition with both vibration load and impact load	1.5 ~ 3

7. Temperature factor (f_T)

Temperature factor is presented in the following graph.

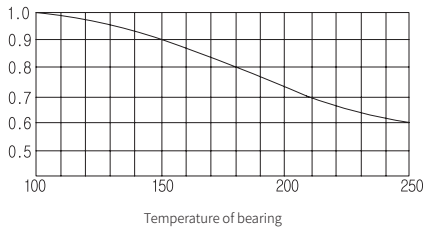

Figure 2. Temperature factor

※ Note: Usually, workable temperature is 80℃or below.
If above, please contact WON ST

5 Load rating

1. Basic dynamic load rating (C)

It refers to the radial load with a constant size and direction, which makes it possible to meet the condition where over 90% in the group of multiple crossed roller bearings with the same model have no flaking and can rotate a million times.

2. Basic static load rating (C_0)

It refers to the static radial load that imposes a certain level of contact stress on the raceway surface with the maximum load and on the center of the contact part of a rotating body in a crossed roller bearing.

6 Permissible RPM

For the permissible RPM of a crossed roller bearing, see the table below.
A permissible RPM depends on assembly or service conditions.

Table 4. Permissible RPM of crossed roller bearing (dm • n)

Seal	Grease lubrication	Oil lubrication
No seal	75,000	150,000
Seals on the both sides	60,000	-

※ dm • n = dm X n

dm : The mean value of inside and outside dimeters (mm)

n : Revolution count (rpm)

7 Lubrication

A crossed roller bearing is commonly lubricated with grease. An oil inlet of the inner ring and outer ring is used for grease supply. A crossed roller bearing with double-sided seal mounting type is filled with Albania EP2 grease.
If a bearing is not filled with a lubricant, please fill it with the grease or oil suitable for service conditions before use. Without lubrication, it is possible to make the rolling surface worn out more and shorten of a bearing life.

8 Cautions in Designing Compression Plate and Housing

A crossed roller bearing is compact and slim. It is required to evaluate the rigidity of a pressure plate or housing plate and the torque of bolts in the process of designing an installation part.
In the case of poor rigidity, it is impossible to assemble the inner and outer rings of a bearing evenly and tightly, and the bearing can be deformed in moment load. In such deformation, a roller fails to make contact uniform and thus performance of the bearing is degraded significantly.

1. Housing design for installation

Housing thickness should be at least 60% of cross-section height of a bearing.

$$T = \frac{D-d}{2} \times 0.6 \text{ or more}$$

T : Housing thickness

D : The outside diameter of the outer ring

d : The outside diameter of the inner ring

2. Tap for separation

If a separation tap is applied to a design, it is easy to separate the inner and outer rings without any damage to a bearing.

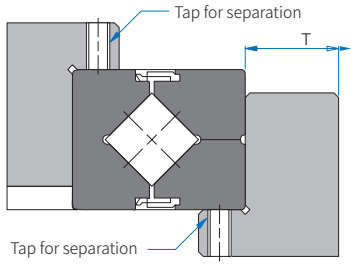

Figure 6.

3. Installation and assembly

For installation and assembly, see the following figure.

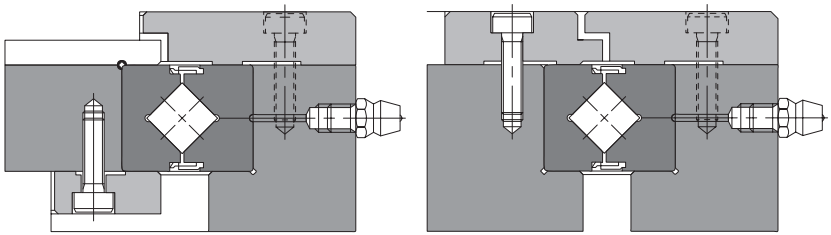

Rotation of inner ring of the turning part Jointing in the same direction of inner and outer rings of the turning part

Figure 7. An example of installation and assembly

4. Selection of compression flange and bolt

The more numbers of the fastening bolts for compression, the more stable. Bolts are arranged in the equimultiples as shown in Table 5. For the thickness (F) and gap (S) of the flange for compression, see the following table of dimensions

F = B X 0.5 ~ B X 1.2

H = $B^{0}_{-0.1}$

S = 0.5mm

To prevent a flange for compression from being loosened, it is required to make firm connection in an appropriate torque level. If a shaft or housing is made of a light alloy material, use steel. For general heavy or light steel, see the following table.

Table 5. Number of compression bolts and bolt size Unit:mm

external diameter of outer ring		No. of bolts	Bolt size
Above	Below		
-	100	8 or more	M3 ~ M5
100	200	12 or more	M4 ~ M8
200	300	16 or more	M5 ~ M12

Table 6. Maximum clamping torque of bolts Unit:N • m

Bolt No.	Clamping torque	Bolt No.	Clamping torque
M3	2	M8	30
M4	4	M10	70
M5	9	M12	120
M6	14	-	-

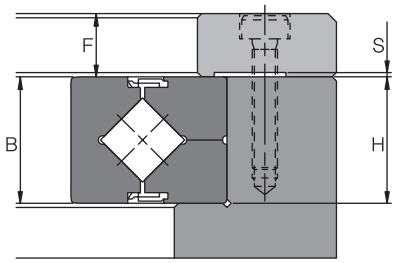

Figure 8.

※ Assembly procedure for installation

The assembly procedure of a crossed roller bearing is as follows.

1. Preliminary check before mounting
Wash a housing or other assembly parts clearly and check if they have any scratch or sharp edge.

2. Axis or housing assembly
Since a bearing is slim, it can be easily inclined in the process of assembly. Make it balanced horizontally with the use of a plastic hammer, and then hammer the cylinder of the outer ring gradually and insert it. Carefully hammer it until the part is set in the contact surface completely.

3. Compression-flange mounting
1) Mount a flange for compression. Check a position for bolt fastening by shaking the flange before assembly.
2) Check that a bolt is positioned well in a hole before fastening the bolt.
3) The bolt fastening process is comprised of 2 to 5 steps from temporary fastening to complete fastening. If the inner ring and outer ring are separated from each other, rotate the integral axis gently and slowly in order to secure an assembly position, and then fasten a bolt in 2 to 5 steps.

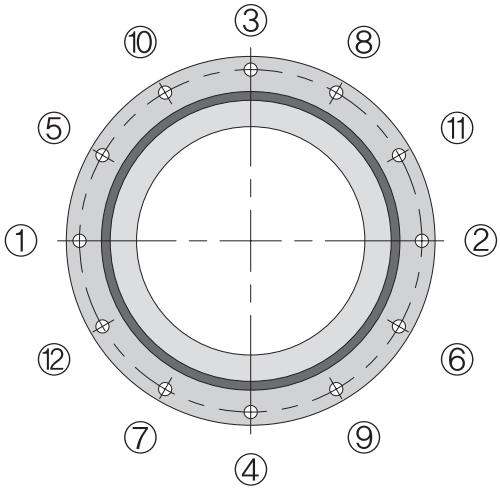

Figure 9.

9 Fitting

For fitting, see the following table

Table 7. Recommended fitting in normal load

Radial internal clearance	Tolerance range class			
	Load fixed to inner ring		Load fixed to outer ring	
	Shaft	Housing bore	Shaft	Housing bore
G_2 clearance	h5	H7	g5	J7[(1)]
G_1 clearance	j5	H7	g5	J7[(1)]

Note[(1)] It is recommended to fit to a small edge according to measured value of a bearing.

Table8. Recommended fitting for the normal clearance of a slim type

Inside diameter of bearing (d)	Load fixed to inner ring				Load fixed to outer ring			
	Shaft		Housing bore		Shaft		Housing bore	
	Max.	Min.	Max.	Min.	Max.	Min.	Max.	Min.
50	+15	0	+13	0	−15	−30	−13	−25
60	+15	0	+13	0	−15	−30	−13	−25
70	+15	0	+15	0	−15	−30	−15	−30
80	+20	0	+15	0	−20	−40	−15	−30
90	+20	0	+15	0	−20	−40	−15	−30
100	+20	0	+15	0	−20	−40	−15	−30
110	+20	0	+20	0	−20	−40	−20	−40
120	+25	0	+20	0	−25	−50	−20	−40
130	+25	0	+25	0	−25	−50	−25	−50
140	+25	0	+25	0	−25	−50	−25	−50
150	+25	0	+25	0	−25	−50	−25	−50
160	+25	0	+25	0	−25	−50	−25	−50
170	+25	0	+30	0	−25	−50	−30	−60
180	+30	0	+30	0	−30	−60	−30	−60
190	+30	0	+30	0	−30	−60	−30	−60
200	+30	0	+30	0	−30	−60	−30	−60

10 Precision Specification of Crossed Roller Bearing

Precision of a crossed roller bearing and dimensional tolerance are calculated with the dimensions described in Table 9 to Table 18.

Table 9. Rotational precision of the inner ring of CH Series

Unit : ㎛

Model No.	Inner ring radial runout tolerance			Inner ring axis runout tolerance		
	Precision	Super precision	Ultra precision	Precision	Super precision	Ultra precision
	P5	P4	P2	P5	P4	P2
CH42	4	3	2.5	4	3	2.5
CH66	5	4	2.5	5	4	2.5
CH85	5	4	2.5	5	4	2.5
CH124	5	4	2.5	5	4	2.5
CH148	6	5	2.5	6	5	2.5
CH178	6	5	2.5	6	5	2.5
CH228	8	6	5	8	6	5
CH297	10	8	5	10	8	5
CH445	15	12	7	15	12	7

Note(1): Standard rotational precision of CH series is P5.

Table 10. Rotational precision of the outer ring of CH Series

Unit : ㎛

Model No.	Inner ring radial runout tolerance			Inner ring axis runout tolerance		
	Precision	Super precision	Ultra precision	Precision	Super precision	Ultra precision
	P5	P4	P2	P5	P4	P2
CH42	8	5	4	8	5	4
CH66	10	6	5	10	6	5
CH85	10	6	5	10	6	5
CH124	13	8	5	13	8	5
CH148	15	10	7	15	10	7
CH178	15	10	7	15	10	7
CH228	18	11	7	18	11	7
CH297	20	13	8	20	13	8
CH445	25	16	10	25	16	10

Note(1): Standard rotational precision of CH series is P5.

Table 11. Rotational precision of the inner ring of CB Series

Unit : ㎛

Nominal dimension (mm) of the inside diameter (d) of bearing		Inner ring radial runout tolerance					Inner ring axis runout tolerance				
		0	PE6	PE5	PE4	PE2	0	PE6	PE5	PE4	PE2
Above	Below		P6	P5	P4	P2		P6	P5	P4	P2
18	30	13	8	4	3	2.5	13	8	4	3	2.5
30	50	15	10	5	4	2.5	15	10	5	4	2.5
50	80	20	10	5	4	2.5	20	10	5	4	2.5
80	120	25	13	6	5	2.5	25	13	6	5	2.5
120	150	30	18	8	6	2.5	30	18	8	6	2.5
150	180	30	18	8	6	5	30	18	8	6	5
180	250	40	20	10	8	5	40	20	10	8	5
250	315	50	25	13	10	(6)	50	25	13	10	(6)
315	400	60	30	15	12	(7)	60	30	15	12	(7)
400	500	65	35	18	14	(9)	65	35	18	14	(9)
500	630	70	40	20	16	(10)	70	40	20	16	(10)
630	800	80	(45)	(23)	(18)	(11)	80	(45)	(23)	(18)	(11)
800	1000	90	(50)	(25)	(20)	(12)	90	(50)	(25)	(20)	(12)

Table 12. Rotational precision of the inner ring of CA Series

Unit : ㎛

Nominal dimension (mm) of the inside diameter (d) of bearing		Radial run-out Allowable value of axial run-out
Above	Below	
40	65	13
65	80	15
80	100	15
100	120	20
120	140	25
140	180	25
180	200	30

Table 13. Dimensional tolerance of the inside diameter of bearing

Unit : ㎛

Nominal dimension (mm) of the inside diameter (d) of bearing		Tolerance of dm Note (2)							
		0,P6,P5,P4,P2,WUP		PE6		PE5		PE4, PE2	
Above	Below	Max.	Min.	Max.	Min.	Max.	Min.	Max.	Min.
18	30	0	-10	0	-8	0	-6	0	-5
30	50	0	-12	0	-10	0	-8	0	-6
50	80	0	-15	0	-12	0	-9	0	-7
80	120	0	-20	0	-15	0	-10	0	-8
120	150	0	-25	0	-18	0	-13	0	-10
150	180	0	-25	0	-18	0	-13	0	-10
180	250	0	-30	0	-22	0	-15	0	-12
250	315	0	-35	0	-25	0	-18	-	-
315	400	0	-40	0	-30	0	-23	-	-
400	500	0	-45	0	-35	-	-	-	-
500	630	0	-50	0	-40	-	-	-	-
630	800	0	-75	0	-	-	-	-	-
800	1000	0	-100	-	-	-	-	-	-

Note(1): Standard precision of the inside diameter of CH series is class 0. For higher precision, please contact WON ST.
Note(2): dm is the mean value between the max diameter and min diameter of the 2-point measurement values of bearing inside diameter.
Note(3): In case of no indication of precision class, the highest of the low precision classes is applied.

Table 14. Dimensional tolerance of the outside diameter of bearing

Unit : ㎛

Nominal dimension (mm) of the inside diameter (d) of bearing		Tolerance of dm Note (2)							
		0,P6,P5,P4,P2,WUP		PE6		PE5		PE4, PE2	
Above	Below	Max.	Min.	Max.	Min.	Max.	Min.	Max.	Min.
30	50	0	-11	0	-9	0	-7	0	-6
50	80	0	-13	0	-11	0	-9	0	-7
80	120	0	-15	0	-13	0	-10	0	-8
120	150	0	-18	0	-15	0	-11	0	-9
150	180	0	-25	0	-18	0	-13	0	-10
180	250	0	-30	0	-20	0	-15	0	-11
250	315	0	-35	0	-25	0	-18	0	-13
315	400	0	-40	0	-28	0	-20	0	-15
400	500	0	-45	0	-33	0	-23	-	-
500	630	0	-50	0	-38	0	-28	-	-
630	800	0	-75	0	-45	0	-35	-	-
800	1000	0	-100	-	-	-	-	-	-

Note(1): Standard precision of the inside diameter of CH series is class 0. For higher precision, please contact WON ST.
Note(2) : dm is the mean value between the max diameter and min diameter of the 2-point measurement values of bearing outside diameter
Note(3): In case of no indication of precision class, the highest of the low precision classes is applied.

Table 15. Tolerance of the inner & outer ring width of CH Series

Unit : ㎛

Model No.	Tolerance of B1	
	Max.	Min.
CH42	0	-75
CH66	0	-75
CH85	0	-75
CH124	0	-75
CH148	0	-75
CH178	0	-100
CH228	0	-100
CH297	0	-100
CH445	0	-150

Table 16. Tolerance of the inner & outer ring width of CB Series

Unit : ㎛

Nominal dimension (mm) of the inside diameter (d) of bearing		Tolerance of B1 Applied to the inner ring of CB		Tolerance of B1 Applied to the outer ring of CB	
Above	Below	Max.	Min.	Max.	Min.
18	30	0	-75	0	-100
30	50	0	-75	0	-100
50	80	0	-75	0	-100
80	120	0	-75	0	-100
120	150	0	-100	0	-120
150	180	0	-100	0	-120
180	250	0	-100	0	-120
250	315	0	-120	0	-150
315	400	0	-150	0	-200
400	500	0	-150	0	-200
500	630	0	-150	0	-200
630	800	0	-150	0	-200
800	1000	0	-300	0	-400

11 Precision Specification of WUP-class Series

1. Rotational precision of WUP-class series (example)

WUP-class Series has higher rotational precision than those of ISO Class2, KS 2, DIN P2, AFBMA ABCE9, and JIS2.

2. Precision specification

The runout precision of CH, CB and WUP-class crossed roller bearing series is based on the Table 17 and Table 18.

Table 17. Runout precision of CH and WUP-class series Unit : ㎛

Model No.	Runout precision of the inner ring of CH series		Runout precision of the outer ring of CH series	
	Radial runout tolerance	Axis runout tolerance	Radial runout tolerance	Axis runout tolerance
CH42	2	2	3	3
CH66	2	2	3	3
CH85	2	2	3	3
CH124	2	2	3	3
CH148	2	2	4	4
CH178	2	2	4	4
CH228	2.5	2.5	4	4
CH297	3	3	5	5
CH445	4	4	7	7

Table 18. Runout precision of CB and WUP-class series Unit : ㎛

Nominal dimensions (mm) of the inner diameter (d) and outside diameter (D)		Runout precision of the inner ring of CB series	
Above	Below	Radial runout tolerance	Axis runout tolerance
80	180	2.5	2.5
180	250	3	3
250	315	4	4
315	400	4	4
400	500	5	5
500	630	6	6
630	800	-	-

12 Radial Clearance

The radial clearance of CH, CB, and CA series is shown in the following tables

Table 19. Radial clearance of CH series

Unit : ㎛

Model No.	G_3		G_2	
	Starting torque (N • m)		Radial clearance (㎛)	
	Min.	Max.	Min.	Max.
CH42	0.1	0.5	0	25
CH66	0.3	2.2	0	30
CH85	0.4	3	0	40
CH124	1	6	0	40
CH148	1	10	0	40
CH178	3	15	0	50
CH228	5	20	0	60
CH297	10	35	0	70
CH445	20	55	0	100

Note: G3 clearance of CH series is controlled by starting torque, and the starting torque of G3 clearance has no seal resistance.

Table 20. Radial clearance of CB and WUP-class series

Unit : ㎛

Pitch circle diameter of roller (dp) (mm)		G_3		G_2	
Above	Below	Min.	Max.	Min.	Max.
120	160	-10	0	0	40
160	200	-10	0	0	50
200	250	-10	0	0	60
250	280	-15	0	0	80
280	315	-15	0	0	100
315	355	-15	0	0	110
355	400	-15	0	0	120
400	500	-20	0	0	130
500	560	-20	0	0	150
560	630	-20	0	0	170
630	710	-20	0	0	190

Table 21. Radial clearance of CB series

Unit : ㎛

Pitch circle diameter of roller (dp) (mm)		G_3		G_2		G_1	
Above	Below	Min.	Max.	Min.	Max.	Min.	Max.
18	30	-8	0	0	15	15	35
30	50	-8	0	0	25	25	50
50	80	-10	0	0	30	30	60
80	120	-10	0	0	40	40	70
120	140	-10	0	0	40	40	80
140	160	-10	0	0	40	40	90
160	180	-10	0	0	50	50	100
180	200	-10	0	0	50	50	110
200	225	-10	0	0	60	60	120
225	250	-10	0	0	60	60	130
250	280	-15	0	0	80	80	150
280	315	-15	0	30	100	100	170
315	355	-15	0	30	110	110	190

Unit : ㎛

Pitch circle diameter of roller (dp) (mm)		G_3		G_2		G_1	
Above	Below	Min.	Max.	Min.	Max.	Min.	Max.
355	400	-15	0	30	120	120	210
400	450	-20	0	30	130	130	230
450	500	-20	0	30	130	130	250
500	560	-20	0	30	150	150	280
560	630	-20	0	40	170	170	310
630	710	-20	0	40	190	190	350
710	800	-30	0	40	210	210	390
800	900	-30	0	40	230	230	430
900	1000	-30	0	50	260	260	480
1000	1120	-30	0	60	290	290	530
1120	1250	-30	0	60	320	320	580
1250	1400	-30	0	70	350	350	630

Table 22. Radial clearance of CA series

Unit : ㎛

Pitch circle diameter of roller (dp) (mm)		G_3		G_2	
Above	Below	Min.	Max.	Min.	Max.
50	80	-8	0	0	15
80	120	-8	0	0	15
120	140	-8	0	0	15
140	160	-8	0	0	15
160	180	-10	0	0	20
180	200	-10	0	0	20
200	225	-10	0	0	20

13 Dimensions of Crossed Roller Bearing

1. CB Series

Composition of Model Name & Number

CB3010	UU	G2	P5	E
1	2	3	4	5

1 Model No.
2 No symbol- No seal / UU- Two-side seal / U- One-side seal
3 Symbol of clearance: G_1-Normal preload / G_2-Light preload / G_3-Heavy preload / Gs-Special preload
4 Symbol of precision: No symbol-Moderate / H6-High / P4-Super Precision / P2-Ultra Precision
5 No symbol-Standard product /E-special specification

- Standard type, The structure inner ring rotation and outer ring separation

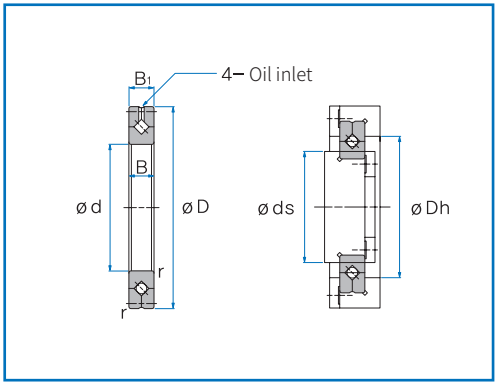

Unit : mm

Shaft diameter	Model No.	Major dimensions							Assembly dimensions		Basic load rating (radial)		Mass
		Inner diameter d	Outside diameter D	Pitch circle diameter of roller dp	Width B B1	Oil inlet a	Oil inlet b	r min	ds max	Dh min	C kN	C0 kN	kg
20	CB 2008	20	36	27	8	2	0.8	0.5	23.5	30.5	3.23	3.1	0.04
25	CB 2508	25	41	32	8	2	0.8	0.5	28.5	35.5	3.63	3.83	0.05
30	CB 3010	30	55	41.5	10	2.5	1	0.6	37	47	7.35	8.36	0.12
35	CB 3510	35	60	46.5	10	2.5	1	0.6	41	51.5	7.64	9.12	0.13
40	CB 4010	40	65	51.5	10	2.5	1	0.6	47.5	57.5	8.33	10.6	0.16
45	CB 4510	45	70	56.5	10	2.5	1	0.6	51	61.5	8.62	11.3	0.17
50	CB 5013	50	80	64	13	2.5	1.6	0.6	57.4	72	16.7	20.9	0.27
60	CB 6013	60	90	74	13	2.5	1.6	0.6	68	82	18	24.3	0.3
70	CB 7013	70	100	84	13	2.5	1.6	0.6	78	92	19.4	27.7	0.35
80	CB 8016	80	120	98	16	3	1.6	0.6	91	111	30.1	42.1	0.7
90	CB 9016	90	130	108	16	3	1.6	1	98	118	31.4	45.3	0.75
100	CB 10016	100	140	119.3	16	3.5	1.6	1	109	129	31.7	48.6	0.83
	CB 10020		150	123	20	3.5	1.6	1	113	133	33.1	50.9	1.45
110	CB 11012	110	135	121.8	12	2.5	1	0.6	117	127	12.5	24.1	0.4
	CB 11015		145	126.5	15	3.5	1.6	0.6	122	136	23.7	41.5	0.75
	CB 11020		160	133	20	3.5	1.6	1	120	143	34	54	1.56

Unit : mm

Shaft diameter	Model No.	Major dimensions							Assembly dimensions		Basic load rating (radial)		Mass
		Inner diameter d	Outside diameter D	Pitch circle diameter of roller dp	Width B B1	Oil inlet a	Oil inlet b	r min	ds max	Dh min	C kN	C0 kN	kg
120	CB 12016	120	150	134.2	16	3.5	1.6	0.6	127	141	24.2	43.2	0.72
	CB 12025		180	148.7	25	3.5	2	1.5	133	164	66.9	100	2.62
130	CB 13015	130	160	144.5	15	3.5	1.6	0.6	137	152	25	46.7	0.72
	CB 13025		190	158	25	3.5	2	1.5	143	174	69.5	107	2.82
140	CB 14016	140	175	154.8	16	2.5	1.6	1	147	162	25.9	50.1	1
	CB 14025		200	168	25	3.5	2	1.5	154	185	74.8	121	2.96
150	CB 15013	150	180	164	13	2.5	1.6	0.6	157	172	27	53.5	0.68
	CB 15025		210	178	25	3.5	2	1.5	164	194	76.8	128	3.16
	CB 15030		230	188	30	4.5	3	1.5	173	211	100	156	5.3
160	CB 16025	160	220	188.6	25	3.5	2	1.5	173	204	81.7	135	3.14
170	CB 17020	170	220	191	20	3.5	1.6	1.5	184	198	29	62.1	2.21
180	CB 18025	180	240	210	25	3.5	2	1.5	195	225	84	143	3.44
190	CB 19025	190	240	211.9	25	3.5	1.6	1	202	222	41.7	82.9	2.99
200	CB 20025	200	260	230	25	3.5	2	2	215	245	84.2	157	4
	CB 20030		280	240	30	4.5	3	2	221	258	114	200	6.7
	CB 20035		295	247.7	35	5	3	2	225	270	151	252	9.6
220	CB 22025	220	280	250.1	25	3.5	2	2	235	265	92.3	171	4.1
240	CB 24025	240	300	269	25	3.5	2	2.5	256	281	68.3	145	4.5
250	CB 25025	250	310	277.5	25	3.5	2	2.5	265	290	69.3	150	5
	CB 25030		330	287.5	30	4.5	3	2.5	269	306	126	244	8.1
	CB 25040		355	300.7	40	6	3.5	2.5	275	326	195	348	14.8
300	CB 30025	300	360	328	25	3.5	2	2.5	315	340	76.3	178	5.9
	CB 30035		395	345	35	5	3	2.5	322	368	183	367	13.4
	CB 30040		405	351.6	40	6	3.5	2.5	326	377	212	409	17.2
350	CB 35020	350	400	373.4	20	3.5	1.6	2.5	363	383	54.1	143	3.9
400	CB 40035	400	480	440.3	35	5	3	2.5	422	459	156	370	14.5
	CB 40040		510	453.4	40	6	3.5	2.5	428	479	241	531	23.5
450	CB 45025	450	500	474	25	3.5	1.6	1	464	484	61.7	182	6.6
500	CB 50025	500	550	524.2	25	3.5	1.6	1	514	534	65.5	201	7.3
	CB 50040		600	548.8	40	6	3	2.5	526	572	239	607	26
	CB 50050		625	561.6	50	6	3.5	2.5	536	587	267	653	41.7
600	CB 60040	600	700	650	40	6	3	3	627	673	264	721	29
700	CB 70045	700	815	753.5	45	6	3	3	731	777	281	836	46
800	CB 80070	800	950	868.1	70	6	4	4	836	900	468	1330	105
900	CB 90070	900	1050	969	70	6	4	4	937	1001	494	1490	120

2. CH Series

Composition of Model Name & Number

CH124	G	UU	G2	P5	E
1	2	3	4	5	6

1 Model No.
2 Shape: No symbol-The same direction of counterbore / G-Opposite direction of counterbore/ X-inner ring tap hole
3 No symbol- No seal / UU- Two-side seal / U- One-side seal (one-side seal of the counterbore of outer ring)/UT-One-side seal (the opposite of the counterbore of outer ring)
4 Symbol of clearance: G_1-Normal preload / G_2-Light preload / G_3-Heavy preload / Gs-Special preload
5 Symbol of precision: No symbol-Moderate / H6-High / P4-Super Precision / P2-Ultra Precision
6 No symbol-Standard product /E-special specification

- High-rigidity type, Integral structure of the inner and outer rings

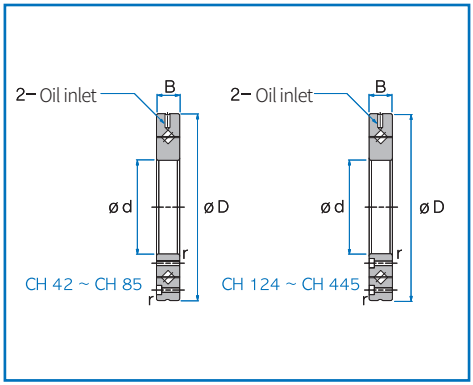

Unit : mm

Shaft diameter	Model No.	Major dimensions						Assembly dimensions		Basic load rating (radial)		Mass
		Inner diameter d	Outside diameter D	Pitch circle diameter of roller dp	Width B	Oil inlet d_1	r min	ds max	Dh min	C kN	C_0 kN	kg
20	CH 42	20	70	41.5	12	3.1	0.6	37	47	7.35	8.35	0.29
35	CH 66	35	95	66	15	3.1	0.6	59	74	17.5	22.3	0.62
55	CH 85	55	120	85	15	3.1	0.6	79	93	20.3	29.5	1
80	CH 124(G)	80	165	124	22	3.1	1	114	134	33.1	50.9	2.6
	CH 124X											
90	CH 148(G)	90	210	147.5	25	3.1	1.5	133	162	49.1	76.8	4.9
	CH 148X											
115	CH 178(G)	115	240	178	28	3.1	1.5	161	195	80.3	135	6.8
	CH 178X											
160	CH 228(G)	160	295	227.5	35	6	2	208	246	104	173	11.4
	CH 228X											
210	CH 297(G)	210	380	297.3	40	6	2.5	272	320	156	281	21.3
	CH 297X											
350	CH 445(G)	350	540	445.4	45	6	2.5	417	473	222	473	35.4
	CH 445X											

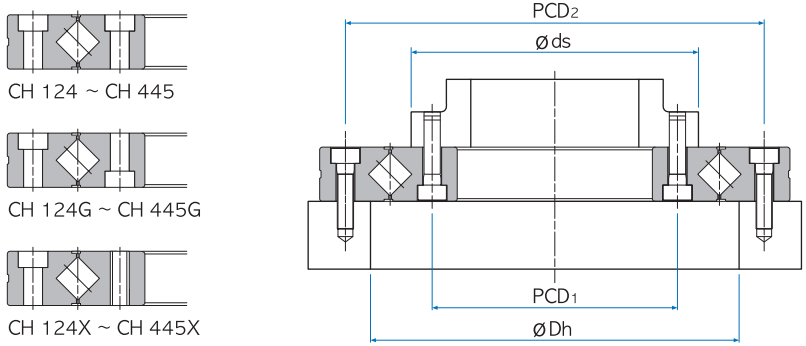

Unit : mm

Shaft diameter	Model No.	Inner ring		Outer ring	
		PCD 1	Mounting hole	PCD 2	Mounting hole
20	CH 42	28	6-M3 penetrated	57	6-ø3.4 penetrated, ø6.5 counterbore depth 3.3
35	CH 66	45	8-M4 penetrated	83	8-ø4.5 penetrated, ø8 counterbore depth 4.4
55	CH 85	65	8-M5 penetrated	105	8-ø5.5 penetrated, ø9.5 counterbore depth 5.4
80	CH 124(G)	97	10-ø5.5 penetrated, ø9.5 counterbore depth 5.4	148	10-ø5.5 penetrated, ø9.5 counterbore depth 5.4
	CH 124X		10-M5 penetrated		
90	CH 148(G)	112	12-ø9 penetrated, ø14 counterbore depth 8.6	187	12-ø9 penetrated, ø14 counterbore depth 8.6
	CH 148X		12-M8 penetrated		
115	CH 178(G)	139	12-ø9 penetrated, ø14 counterbore depth 8.6	217	12-ø9 penetrated, ø14 counterbore depth 8.6
	CH 178X		12-M8 penetrated		
160	CH 228(G)	184	12-ø11 penetrated, ø17.5 counterbore depth 10.8	270	12-ø11 penetrated, ø17.5 counterbore depth 10.8
	CH 228X		12-M10 penetrated		
210	CH 297(G)	240	16-ø14 penetrated, ø20 counterbore depth 13	350	16-ø14 penetrated, ø20 counterbore depth 13
	CH 297X		16-M12 penetrated		
350	CH 445(G)	385	24-ø14 penetrated, ø20 counterbore depth 13	505	24-ø14 penetrated, ø20 counterbore depth 13
	CH 445X		24-M12 penetrated		

3. CA Series

Composition of Model Name & Number

CA5008	UU	G_2	P5	E
1	2	3	4	5

1 Model No.
2 No symbol- No seal / UU- Two-side seal / U- One-side seal
3 Symbol of clearance: G_1-Normal preload / G_2-Light preload / G_3-Heavy preload / Gs-Special preload
4 Symbol of precision: No symbol-Moderate / H6-High / P4-Super Precision / P2-Ultra Precision
5 No symbol-Standard product /E-special specification

- Slim type, The structure inner ring rotation and outer ring separation

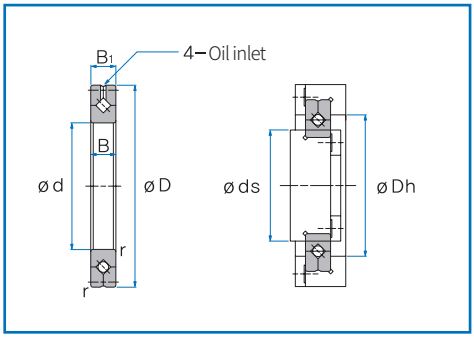

Unit : mm

Shaft diameter	Model No.	Major dimensions							Assembly dimensions		Basic load rating (radial)		Mass
		Inner diameter d	Outside diameter D	Pitch circle diameter of roller dp	Width B B1	Oil inlet a	Oil inlet b	r_{min}	ds (max)	Dh (min)	C kN	C0 kN	kg
50	CA 5008	50	66	57	8	2	0.8	0.5	53.5	60.5	5.1	7.19	0.08
60	CA 6008	60	76	67	8	2	0.8	0.5	63.5	700.5	5.68	8.68	0.09
70	CA 7008	70	86	77	8	2	0.8	0.5	73.5	80.5	5.98	9.8	0.1
80	CA 8008	80	96	87	8	2	0.8	0.5	83.5	90.5	6.37	11.3	0.11
90	CA 9008	90	106	97	8	2	0.8	0.5	93.5	100.5	6.76	12.4	0.12
100	CA 10008	100	116	107	8	2	0.8	0.5	103.5	110.5	7.15	13.9	0.14
110	CA 11008	110	126	117	8	2	0.8	0.5	113.5	120.5	7.45	15	0.15
120	CA 12008	120	136	127	8	2	0.8	0.5	123.5	130.5	7.84	16.5	0.17
130	CA 13008	130	146	137	8	2	0.8	0.5	133.5	140.5	7.94	17.6	0.18
140	CA 14008	140	156	147	8	2	0.8	0.5	143.5	150.5	8.33	19.1	0.19
150	CA 15008	150	166	157	8	2	0.8	0.5	153.5	160.5	8.82	20.6	0.2
160	CA 16013	160	186	172	13	2.5	1.6	0.8	165	179	23.3	44.9	0.59
170	CA 17013	170	196	182	13	2.5	1.6	0.8	175	189	23.5	46.5	0.64
180	CA 18013	180	206	192	13	2.5	1.6	0.8	185	199	24.5	49.8	0.68
190	CA 19013	190	216	202	13	2.5	1.6	0.8	195	209	24.9	51.5	0.69
200	CA 20013	200	226	212	13	2.5	1.6	0.8	205	219	25.8	54.7	0.71

14 Precautions for Handling Crossed Roller Bearing

1. If the assembly part for installation fails to have sufficient rigidity, the contact part of the rollers has intensive stress that severely degrades the performance of a bearing. In an environment with large moment, it is required to evaluate the rigidity of housing and bolts in the process of design.

2. Some parts of a crossed roller bearing are made of special synthetic rubber and synthetic resin. For the use at above 80℃, please contact WONST.

3. It is required to manage dimensional tolerance of assembly parts according to standards in order to make the inner and outer rings in tight contact with the sides.

4. A crossed roller bearing may be damaged by its fall or hit. Any impact to the bearing may cause functional loss even if there is no damage to its appearance. Be careful to handle the product.

5. If foreign substances flow in a crossed roller bearing, they may cause its functional loss. It is required to take measures to prevent cutting chips or dust from intruding in the device.

6. A crossed roller bearing is already filled with lithium soap grease at the time of shipment. So, it can be used without refilling at the time of assembly. It is necessary to connect a lubrication hole with the oil inlet of the inner or outer ring. Regardless of rotation frequency, it is required to refill enough not for a lubricant to ooze out in the cycle of six months to one year.

7. Avoid lubricants with different thickeners or additives, if possible.

8. If you need to use the product in a place with impact or vibration load, in cleanroom, or in a special environment with vacuum, low temperature, or high temperature. please contact WON ST.

WON

LINEAR MOTION SYSTEM

Ball Spline
Contents

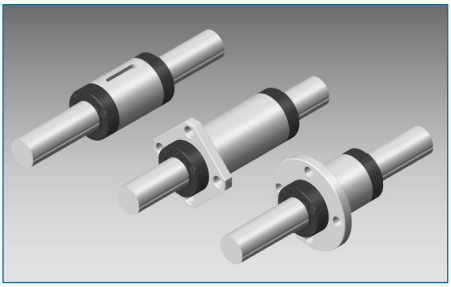

1 WON Ball Spline

1. Structure and Features

WON Ball Spline consists of a nut and a shaft. The ball of the nut has a rolling linear motion along the groove of the precisely-ground spline shaft. The spline has the linear motion to deliver torque in the circu mferential direction of the shaft. Based on one nut, the device exerts high performance in the radial directi on, in an environment with vibration and impact load, in an environment that requires high positioning precision, or in an environment that needs high-speed motion.

2. Transmission of high torque

A spline groove is precisely ground in the shape close to a ball diameter. For this reason, if torque load is imposed on a shaft or nut, it is evenly applied to two rows of the ball in the torque load direction in the transmission of rotatory force.

3. High load capacity and long life

WON Ball Spline can be designed to be compact. It ensures high stability and long life in an environment with high load or torsional load.

4. Zero gap

Since a ball spline minimizes the gap of the rotational direction, and, if necessary, imposes preload on one spline nut to make clearance zero, it can have a small displacement value and obtain high rigidity and high positioning precision.

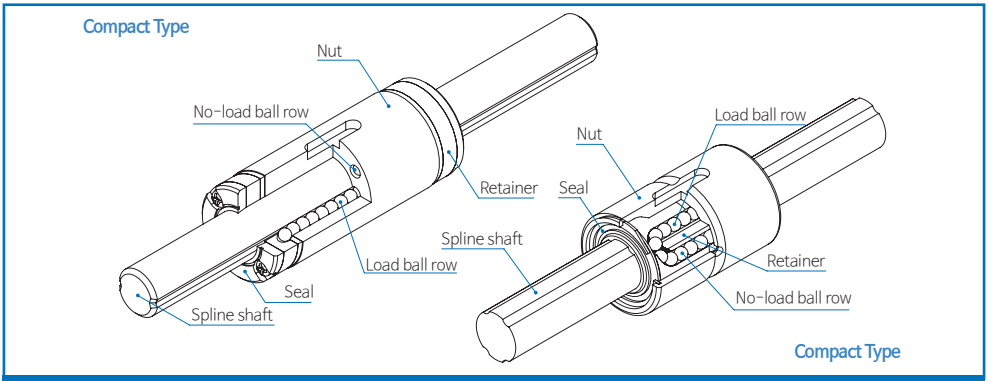

Figure 1. Structure of ball spline

Ball Spline	Compact Ball Spline	- 2 rows and 4 points contact type - Simple structure and very compact type
	Linear Ball Spline	- 4 rows and 2 points contact type - Angular contact type, and high load rating in radial direction and torque direction

2 Selection of Ball Spline

1. Overview

To select a ball spline, it is necessary to identify the details of requirements, prioritize them, and then choose the one that meets the service conditions.

2. Procedure

1 Determine service conditions	The equipment to be used, maintenance structure, installation space, assembly state, functional requirements, service environments
2 Select a type	Determine an appropriate type in consideration of motion conditions, load magnitude, rigidity, friction, and assembly.
3 Select a model number	Determine an appropriate model number and a quantity of nuts in consideration of the assembled space, load, etc.
4 Calculate load	Calculate the vertical, horizontal, and moment load imposed on nut and shaft, a critical speed of shaft, an operating speed of shaft, etc.
5 Calculate equivalent load	Convert each load imposed on nut and shaft into equivalent load.
6 Calculate mean load	Convert each load imposed on nut and shaft and the variable load at deceleration & acceleration into mean load.
7 Calculate static safety factor	Calculate the static safety factor with basic load rating and maximum equivalent load, and check if the calculated value meets a service condition.
8 Calculate life	Calculate load rating and life, and check if the calculated values meet service conditions.
9 Review preload and clearance	Determine the preload and clearance that meet service conditions.
10 Determine a class of precision	Determine a class of precision for the travel or rotation that a ball spline needs.
11 Lubrication, dust proof, and surface treatment	Determine a grease lubricant, oil lubricant, or a special lubricant suitable for an environment. Select a dust-proof seal/ Determine the surface treatment for dust proof and low dust generation.
12 Complete selection	Determine the final specifications of a ball spline.

3 Life Calculation

1. Life

When a ball spline runs in the course of bearing external load, the stress, which arises when the raceway surface of nut and axis and a rolling element bear continuously repeated load, causes fatigue failure and leads to flaking. Life of a ball spline refers to a total travel distance until the point that flaking arises due to initial fatigue failure.

- A ball spline can have defects earlier than the time of normal flaking caused by its wear or fatigue in the following cases

a. Excess load by the imprecise assembly following a difference in temperature or tolerance
b. If a ball spline is contaminated with foreign substances
c. Driving with insufficient lubrication
d. Reciprocating motion in a very short distance in the form of vibration or wave during halting or driving
e. Excessive load or rotational torque imposed on a ball spline
f. Deformation of plastic end-plate

2. Rating fatigue life L

Generally Ball Spline does not always have an equal life span even though its products are manufactured in the same way, because of the difference in scattering of original fatigue of raw material. For this reason, the reference value of life of a ball spline is defined as the rating fatigue life which is a total driving distance that 90% of ball splines in one group with the same specifications can reach without flaking at the time when all in the group run under the same conditions.

Radial load

$$L = \left(\frac{f_H \cdot f_T \cdot f_C}{f_W} \cdot \frac{C}{P_C} \right)^3 \times 50\,km$$

Torque load

$$L = \left(\frac{f_H \cdot f_T \cdot f_C}{f_W} \cdot \frac{T}{P_T} \right)^3 \times 50\,km$$

$$L_h = \frac{10^3 \cdot L}{2 \times \ell_s \times n_1 \times 60}$$

L	: Rated life	(km)
C	: Basic dynamic rated load	(N)
T	: Basic dynamic rated torque	(N · m)
P_C	: Calculated load	(N)
P_T	: Calculated torque	(N · m)
f_H	: Hardness factor (See Figure 2.)	
f_T	: Temperature factor (See Figure 3.)	
f_C	: Contact factor (See Table 2.)	
f_W	: Load factor (See Table 3.)	
L_h	: Life time	(h)
ℓ_s	: Stroke length	(m)
n_1	: No. of reciprocating motions per minute	(min^{-1})

- Hardness factor (f_H)

To implement the best performance of a ball spline, it is necessary to maintain appropriately the hardness and depth of the raceway surface of the nut and shaft that contact a ball as a rolling element.
WON Ball Spline has HRC58-64 surface hardness. There is no need to consider hardness factor.
If the hardness is lowered than a baseline, load capacity of a ball spline decreases. In this case, it is necessary to apply hardness factor to life calculation

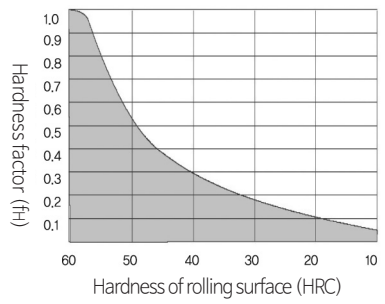

Figure 2. Hardness factor (f_H)

- Temperature factor (f_T)

If high temperature over 100℃ is applied to a ball spline, it is necessary to take into account the temperature factor (f_T) shown in the figure at the time when a ball spline is selected. For use at over 80℃, please contact WON ST.

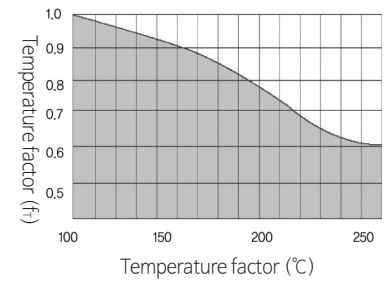

Figure 3. Temperature factor (f_T)

Note) If ambient temperature is over 80℃, it is necessary to change the material of seal, end plate, and support plate to the one which meets the specifications for high temperature.

- Contact factor (f_C)

If over two blocks of a ball splines are closely assembled and mounted, uniform load may not be applied to them due to difference among mounting surfaces. Therefore, it is required to multiply basic static load rating (C) and basic dynamic load rating (C_0) by the contact factor shown in Table 1.

Table 2. Contact factor (f_C)

No. of nuts in close contact	Contact factor f_C
2	0.81
3	0.72
4	0.66
5	0.61
Over 6	0.6
Common use	1.0

• Load factor (fw)

Generally the static load applied to the nut of a linear motion guide can be calculated in formula. However, while a machine is running, the load imposed on the nut tends to come from vibration or impacts. Therefore, as for the vibration or impact load at high-speed running, it is necessary to divide the basic dynamic load rating of a ball spline by the load factor (fw) shown in Table 3.

Table 3. Load facto (fw)

External condition	Service conditions	Load factor (fw)
Low	Smooth running at mild speed; no external vibration or impacts	1.0 ~ 1.3
Moderate	Moderate - Low speed; moderate external vibration or impacts	1.2 ~ 1.5
High	High - High speed; strong vibration or impacts	1.5 ~ 2.0
Very high	Very high - Very high speed; strong vibration and impacts at running	2.0 ~ 4.0

Static Safety Factor fs

If heavy load or big impact is imposed on a ball spline, its rolling element and raceway surface have local and permanent deformation that leads to lowering its running performance. Limit of a ball spline depends on its service conditions and requirements.
In this case, the static safety factor fs is calculated in the following formula, and its general values are presented in Table 4.

$$f_s = \frac{C_o}{P_{ro}} \text{ 또는 } f_s = \frac{T_o}{P_{to}}$$

fs : Static safety factor
Co : Basic static rated load (N)
To : Basic static rated torque (N · m)
Pro : Calculated load (N)
Pto : Calculated torque (N · m)

Table 4. Static safety factor (fs)

Service condition	safety factor (fs)
Vibration and impacts	3 ~ 5
High running	2 ~ 4
Normal operation	1 ~ 3

4. Basic Dynamic Load Rating (C)

Basic dynamic load rating is ability of a ball spline to bear load, which represents an applicable constant load in direction and magnitude when the rated fatigue life is 50km. The reference value of basic dynamic load rating of WON Ball Spline is 50km (ball type). It is used for calculating life of a ball spline while driving under constant load in magnitude from the center of a nut to bottom.
Each value of basic dynamic load rating (C) is described in the catalogue.

5. Basic static load rating C_0

If a ball spline is applied by excessive load or instantly by big impact load, partially permanent deformation occurs between a rolling element and the raceway surface. If deformation reaches to a certain extent, it hinders smooth driving.
Basic static load rating is defined as the constant static load in direction and magnitude when the total permanent deformation of the raceway surface of nut and shaft and a ball as a rolling element is 0.0001 times bigger than the diameter of the rolling element.
In a ball spline, it refers to the load in radial direction on the center of the contact of nut and ball. Each value of basic static load rating (C_0) is described in the specification table.

6. Basic Dynamic Rated Torque T

Load rated torque refers to the constant torque in direction and size in the condition where 90% in one group of ball splines with the same specification travel 50km without material damage (flaking). See Figure 5.

7. Basic Static Rated Torque T_0 · Basic Static Rated Moment T_M

Basic static torque and basic static moment refer to the static torque and moment that can face a certain amount of contact stress at the center of the contact of the rolling element with the maximum load and the raceway surface, when torque or moment load is imposed on. The TM described in the table of dimensions is the basic static rated moment of one sleeve and of two sleeves in close contact.

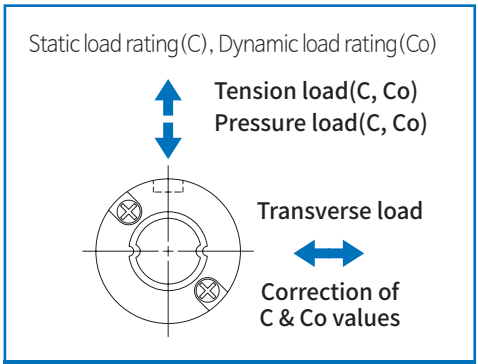

Figure 4. Load rating and load direction

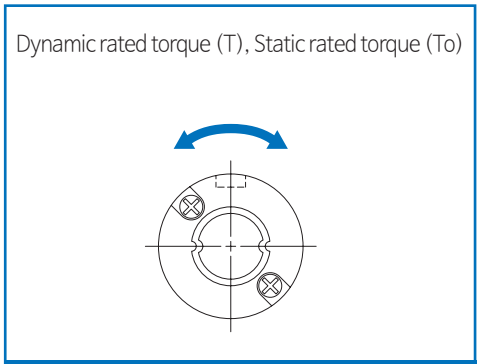

Figure 5. Load direction of rated torque

A compact-type ball spline is used after load rating is corrected in the direction of load.
The basic dynamic load rating and basic static load rating shown in the table of dimensions are corrected according to the following table.
(Basic dynamic rated torque, basic static rated torque and basic rated moment are also corrected in the same multiple.)

Size	Basic dynamic load rating			Basic static load rating		
	Pressure load	Tension load	Transverse load	Pressure load	Tension load	Transverse load
4~12	C	C	1.73C_0	C_0	C_0	1.73C_0
15~40	C	C	1.19C_0	C_0	C_0	1.19C_0

4 Preload of Ball Spine

Preload

A ball spline can be preloaded differently depending on service conditions. In order to increase rigidity of a ball spline and lessen the displacement for external load, it is possible to preload the device in the way of removing a gap with the use of the ball (as a rolling element) inserted in between a shaft and a nut, or inserting a ball larger than the gap between the shaft and nut. If vibration or variable load is imposed on and high rigidity are needed, it is necessary to determine the preload suitable for service conditions in consideration of life of a ball spline.

Table 5. Preload

External condition	Symbol	Preload (N)	Applied equipment
Zero preload	CL	0(1) ~ +	• Mechanical equipment requiring light running with small torque
Standard	CM	0(2) ~ –	• General mechanical equipment • Mechanical equipment requiring small motion resistance
Light preload	CT	0.02Co	• Mechanical equipment requiring rigidity • Mechanical equipment to which large vibration or impact load is applied • Mechanical equipment to which big moment load or variable load is applied

Note. (1) Zero preload
(2) Zero or a little of preload

Remark: Light preload is not applied to WSP4, WSPT4, WSPTK4

5 Precision

Precision of a ball spline is related to its outside diameter of nut runout on the basis of shaft. WON Ball Spline has the precision of KS B 1422(JIS B 1193).
The precision of ball spline is categorized into three classes: normal (no symbol), high (H), and precision (P).
A class of precision is described according to the arrangement of a model number.
The values in the tables include the precision in the case where the shaft ends are processed.
For the precision class of ball spline, see tables 6, 7, and 8.
WON ST also manufactures a product that has higher precision than in the tables, or a product with a special shape at request of a customer. If necessary, please contact us.

Table 6. Torsion of ball spline

External condition	Torsion(MAX)		
	Normal	High	Precision
Tolerance	33㎛/100㎜	13㎛/100㎜	6㎛/100㎜

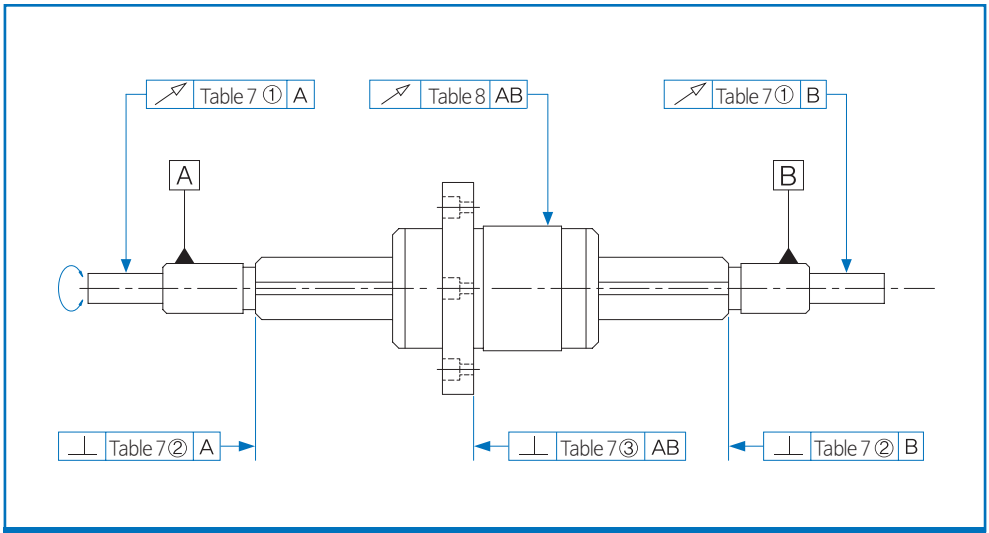

Figure 6. Precision measurement items of ball spline

Table 7. Precision of each part of ball spline

Unit : ㎛

Model no.		WSP4	WSP5	WSP6	WSP8	WSP10	WSP12	–	WSP15	WSP20	WSP25	WSP30	WSP40
		–			WLS8	WLS10	–	WLS13	WLS16	WLS20	WLS25	WLS30	WLS40
① Radial direction runout of installation part	Normal (No symbol)	33				41		46			53		62
	High (H)	14				17		19			22		25
	Precision (P)	8				10		12			13		15
② Vertical angle of the cross section of spline part	Normal (No symbol)	22						27			33		39
	High (H)	9						6			13		16
	Precision (P)	6						8			9		11
③ Vertical angle of the flange side from the central line of spline shaft	Normal (No symbol)	27				33					39		46
	High (H)	11				13					16		19
	Precision (P)	8				9					11		13

Table 8. Radial direction runout of the central line of ball spline shaft

Unit : ㎛

Length of spline shaft (mm)	Above	–	200	315	400	500	630	800	1000	1250
	Below	200	315	400	500	630	800	1000	1250	1600
WSP 4 WSP 5 WSP 6 WSP 8 WLS 8	Normal (No symbol)	72	133	185	236	–	–	–	–	–
	High (H)	46	89	128	163	–	–	–	–	–
	Precision (P)	26	57	82	108	–	–	–	–	–
WSP 10 WSP 12 WLS 10	Normal (No symbol)	59	83	103	123	151	190	–	–	–
	High (H)	36	54	68	82	102	130	–	–	–
	Precision (P)	20	32	41	51	65	85	–	–	–
WSP 15 WSP 20 WLS 13 WLS 16 WLS 20	Normal (No symbol)	56	71	83	95	112	137	170	–	–
	High (H)	34	45	53	62	75	92	115	–	–
	Precision (P)	18	25	31	38	46	58	75	–	–
WSP 25 WSP 30 WLS 25 WLS 30	Normal (No symbol)	53	58	70	78	88	103	124	151	–
	High (H)	32	39	44	50	57	68	83	102	–
	Precision (P)	18	21	25	29	34	42	52	65	–
WSP 40 WLS 40	Normal (No symbol)	53	58	63	68	74	84	97	114	139
	High (H)	32	36	39	43	47	54	63	76	93
		16	19	21	24	27	32	38	47	–

6 Lubrication and Dust Resistance

A ball spline has the treatment with anti-rust additives that has affinity with all mineral oils.
It can be lubricated with oil or grease. Grease lubrication generates an additional sealing effect, and sticks well in a ball spline. Therefore, it is recommended to use grease.
In case of grease refilling, it is necessary to use a ball spline whose nut has an oil hole. WON Ball Spline is dust resistant through its special rubber seal. Nevertheless, if a lot of foreign substances or dust float, it is recommended to attach an anti-dust device to protect a spline shaft against relatively large impurities like cutting chips or sand.

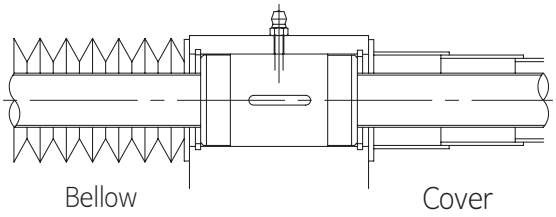

Figure 7. An example of anti-dust device

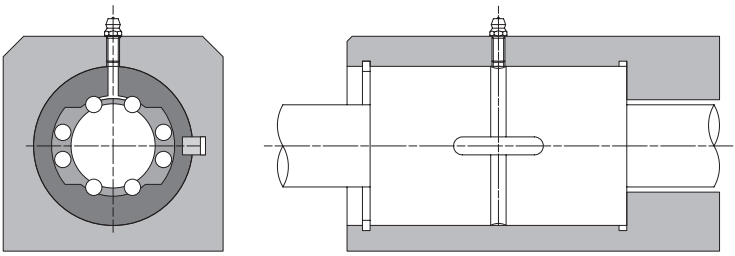

Figure 8. An example of refilling device

7 Assembly

Nut fitting

As for nut and housing fitting, WON Ball Spline has a transition fit (J7).
If precision and rigidity are not needed much, it is possible to apply a clearance fit (H7).

Insertion of spline nut

Inserting a spline nut into a housing may affect the operation of a device. In order to prevent any impact from being imposed on a retainer, use a jig for installation as shown in the following figure when inserting the nut.

Insertion of spline shaft

When a spline shaft is inserted into a spline nut, a ball may come out. Therefore, set raceway groove of the shaft, ball row of the spline nut, and position of a seal rightly before insertion.

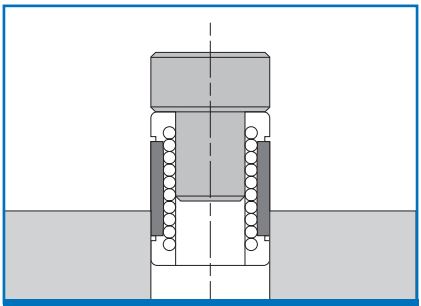

Figure 9.

8 Caution for Use

① The working temperature of WON Ball Spline is max. 120℃ in case of discontinuous use, and max. 80℃ for continuous use. If above 80℃, please contact WON ST.

② WON Ball Spline is set to optimal precision in the condition where its spline shaft and nut mark are in the same direction and position (See Figure 10). To attach it to a machine, it is careful not to change steering of a spline shaft, arrangement of a nut, and a steering direction.

③ If more than two keys are used to fix the rotation direction of an outer sleeve on the basis of one shaft and over two nuts, it is required to make the position of each key groove of nut in parallel. For this case, please contact WON ST.

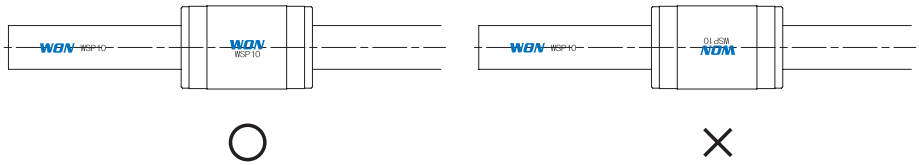

Figure 10

9 Compact Ball Spline

1. Structure and Features

WON Ball Spline is composed of a nut and a shaft. The nut has a ball as a rolling element installed in. The rolling surface of the shaft has a Gothic arch shaped groove processed. The ball of the nut rolls in a linear line along the precisely polished groove of the rolling surface. With one nut, the device can bear radial load and moment load and can transmit rotational torque in the circumferential direction of the shaft. With the use of the ball in between the raceways of nut and shaft, it is possible to apply preload. For this reason, the ball spline is strongly resistant for vibration or impact load. The linear motion system is applicable to an environment that needs high positioning precision, high-speed motion, and a long life span.

2. Transmission of high torque

A ball spline have Gothic arch shaped grooves in two rows on the rolling surface of nut and the rolling surface of shaft, which are precisely polished. Therefore, a ball can contact four points. Thanks to such a structure, it is possible to let the two rows evenly bear the rotational torque of nut and transmit rotational force.

3. High load capacity and long life

A ball spline has a linear type and has the structure of contact between the rolling surface of nut and shaft, and a ball as a rolling element. In the condition diameter of a shaft is equal, the device is capable of bearing rated load about ten times more than a ball bushing, ensuring a long life span. Therefore, it supports a compact design of equipment and bears moment load and overhang load as well as radial load.

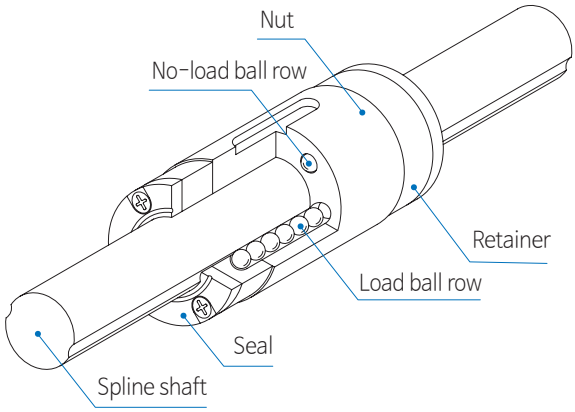

Figure 11. Structure of compact ball spline

Classification	Type	Shape and Features	
Cylinder Type	WSP WSPL		It has a general spline nut that has a key groove helping to fix the position of a rotational direction accurately.
	WSPT WSPTO	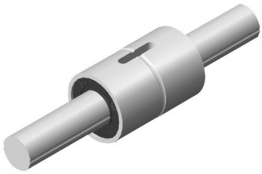	Since a retainer is placed inside, this ball spline has good appearance and rigidity.
Flange Type	WSPF WSPFL	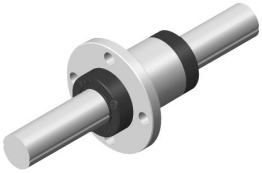	As a round flange type, it can be installed easily.
	WSPK WSPKL	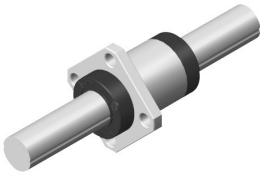	As a square flange type, it can be installed easily.
	WSPTF WSPTFO	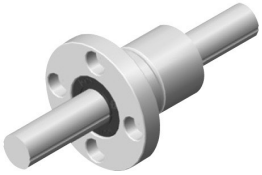	As a round flange type, it can be installed easily.

WSP Series

An example of the Composition of Model Name & Number

2	WSP6			—	S	300	CM	H		
1	2	3	4		5	6	7	8	9	10

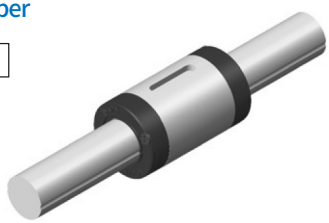

1. Number of nuts assembled in one shaft
2. Model No.
3. Material of nut: No symbol-Standard material/M-Stainless
4. No symbol-Standard nut / E-Special nut specification
5. Type of shaft: S-Solid / H-Hollow
6. Length of shaft
7. Symbol of clearance : CL-No preload / CM-Standard / CT-Light preload
8. Symbol of precision : No symbol-Normal / H-Precision / P-Super
9. Material of shaft : No symbol-Standard material / M-Stainless
10. No symbol-Standard shaft / E-Special shaft specification

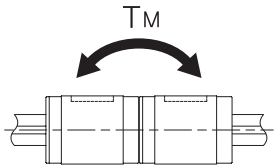

Model No.	Major dimensions											
	Outside diameter		L_1	L_2	Dimension of key groove				Main		Length L	Max. length
	D	Tolerance			W	Tolerance	t	ℓ	d	Tolerance		
WSP 4(2)	8	0 −0.009	12	7.9	–	+0.014 0	1	–	4	0 −0.012	100 150	200
WSP 5	10		17.5	8.9	2		1.2	6	5		100 150	200
WSP 6	12	0 −0.011	20.6	12	2		1.2	8	6		150 200	300
WSP 8	15		24.4	14	2.5		1.5	8.5	8	0 −0.015	150 200 250	500
WSP 10	19	0 −0.013	29.6	17.8	3		1.8	11	10		200 300	600
WSP 12	21		34.7	22.7	3		1.8	15	12	0 −0.018	200 300 400	800
WSP 15	23		40	27	3.5	+0.018 0	2	20	13.6		200 300 400	1000
WSP 20	30	0 −0.016	50	33	4		2.5	26	18.2	0 −0.021	300 400 500 600	1000
WSP 25	37		60	39.2	5		3	29	22.6		300 400 500 600 800	1200
WSP 30	45		70	43	7	+0.022 0	4	35	27.2		400 500 600 700 1100	
WSP 40	60	0 −0.019	100	70.8	10		4.5	55	37.2	0 −0.025		

Note (1) The top value of the static rated moment T_M means the value of one nut, and the bottom value represents the value of two nuts in contact.
(2) WSP4 has no seal.

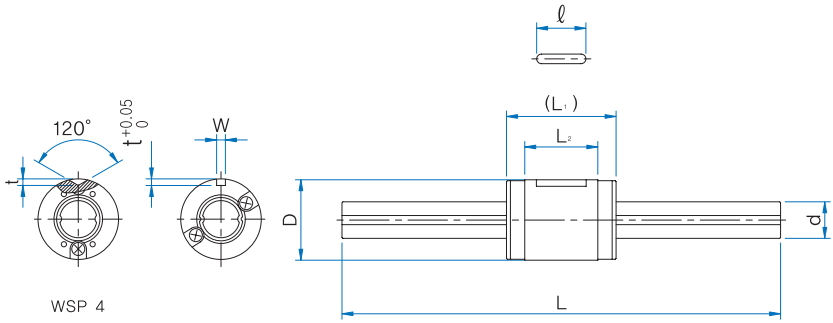

Unit : mm

Basic dynamic load rating	Basic static load rating	Basic dynamic rated torque	Basic static rated torque	Basic static rated moment(1)	Spline nut		Model No.
C N	Co N	T N • m	To N • m	TM N • m	Spline nut g	Spline shaft g/100mm	
304	382	0.686	0.882	0.49 2.94	2.5	9.6	WSP 4
588	637	1.764	1.96	1.078 7.84	4.8	14.9	WSP 5
715	853	2.45	3.038	1.764 11.76	8.9	19	WSP 6
1176	1372	5.488	6.174	3.234 21.56	15.9	39	WSP 8
1862	2156	10.78	12.74	6.958 41.16	31.5	60.5	WSP 10
2156	2646	14.7	18.62	10.78 58.80	44	87.5	WSP 12
4241	6076	31.36	45.08	27.44 151.90	59.5	111	WSP 15
6566	9016	65.66	90.6	49.00 287.14	130	202	WSP 20
11196	14294	138.94	177.93	92.76 550.78	220	310	WSP 25
15394	19392	230.91	291.88	146.94 873.65	430	450	WSP 30
21291	31587	425.83	631.75	363.85 1939.22	760	808	WSP 40

1N≒0.102kgf

WSPL Series

An example of the Composition of Model Name & Number

2	WSPL6			—	S	300	CM	H		
1	2	3	4		5	6	7	8	9	10

1. Number of nuts assembled in one shaft
2. Model No.
3. Material of nut: No symbol-Standard material/M-Stainless
4. No symbol-Standard nut / E-Special nut specification
5. Type of shaft: S-Solid / H-Hollow
6. Length of shaft
7. Symbol of clearance : CL-No preload / CM-Standard / CT-Light preload
8. Symbol of precision : No symbol-Normal / H-Precision / P-Super
9. Material of shaft : No symbol-Standard material / M-Stainless
10. No symbol-Standard shaft / E-Special shaft specification

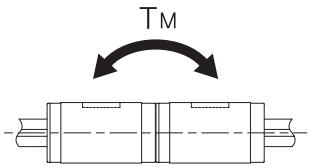

Model No.	Major dimensions											
	Outside diameter		L_1	L_2	Dimension of key groove				Main		Length L	Max. length
	D	Tolerance			W	Tolerance	t	ℓ	d	Tolerance		
WSPL 5	10	0 −0.009	26	17.4	2	+0.014 0	1.2	6	5	0 −0.012	100 150	200
WSPL 6	12	0 −0.011	29.8	21.2	2		1.2	8	6		150 200	300
WSPL 8	15		36.7	26.3	2.5		1.5	8.5	8		150 200 250	500
WSPL 10	19	0 −0.013	47	34.9	3		1.8	11	10	0 −0.015	200 300	600
WSPL 12	21		53.1	41.1	3		1.8	15	12		200 300 400	800
WSPL 15	23		65	52	3.5	+0.018 0	2	20	13.6	0 −0.018	200 300 400	1000
WSPL 20	30	0 −0.016	71	54	4		2.5	26	18.2		300 400 500 600	1000
WSPL 25	37		84	63.2	5		3	29	22.6	0 −0.021	300 400 500 600 800	1200
WSPL 30	45		98	71	7	+0.022 0	4	35	27.2		400 500 600 700 1100	

Note (1) The top value of the static rated moment T_M means the value of one nut, and the bottom value represents the value of two nuts in contact.

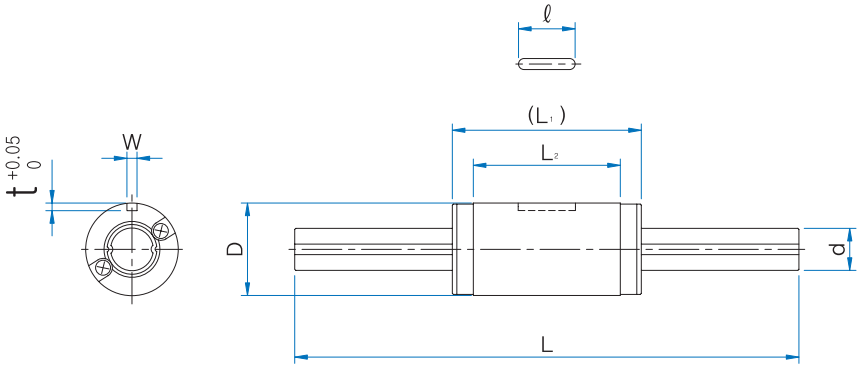

Unit : mm

Basic dynamic load rating	Basic static load rating	Basic dynamic rated torque	Basic static rated torque	Basic static rated moment(1)	Spline nut		Model No.
C N	Co N	T N • m	To N • m	TM N • m	Spline nut g	Spline shaft g/100mm	
882	1176	2.646	3.528	3.136 19.60	7.9	14.9	WSPL 5
1078	1470	3.626	5.194	4.998 27.44	14.5	19	WSPL 6
1764	2450	8.33	11.76	9.80 56.84	26.5	39	WSPL 8
2842	4018	16.66	23.52	22.54 115.64	56.5	60.5	WSPL 10
3234	4802	21.56	33.32	32.34 156.80	76.8	87.5	WSPL 12
6370	11564	48.02	86.24	94.08 447.86	110	111	WSPL 15
9310	15092	93.10	150.92	127.40 619.36	198	202	WSPL 20
15394	23191	192.92	289.88	228.91 1189.52	336	310	WSPL 25
21291	31587	319.87	473.81	363.85 1899.24	634	450	WSPL 30

1N≒0.102kgf

WSPT Series

An example of the Composition of Model Name & Number

1	WSPT6			—	S	300	CM	H		
1	2	3	4		5	6	7	8	9	10

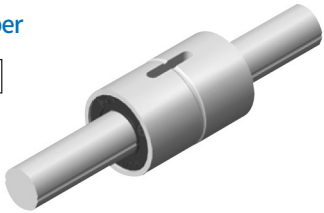

1. Number of nuts assembled in one shaft
2. Model No.
3. Material of nut: No symbol-Standard material/M-Stainless
4. No symbol-Standard nut / E-Special nut specification
5. Type of shaft: S-Solid / H-Hollow
6. Length of shaft
7. Symbol of clearance : CL-No preload / CM-Standard / CT-Light preload
8. Symbol of precision : No symbol-Normal / H-Precision / P-Super
9. Material of shaft : No symbol-Standard material / M-Stainless
10. No symbol-Standard shaft / E-Special shaft specification

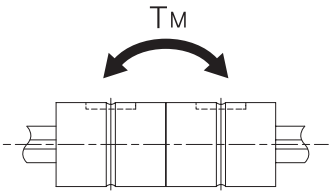

Model No.	Major dimensions										
	Outside diameter		L_1	Dimension of key groove				Main		Length L	Max. length
	D	Tolerance		W	Tolerance	t	ℓ	d	Tolerance		
WSPT 4	10	0 −0.009	16	2	+0.014 0	1.2	6	4	0 −0.012	100 150	200
WSPT 5	12	0 −0.011	20	2.5		1.2	8	5		100 150	200
WSPT 6	14		25	2.5		1.2	10.5	6		150 200	300
WSPT 8	16		25	2.5		1.2	10.5	8	0 −0.015	150 200 250	500
WSPT 10	21	0 −0.013	33	3		1.5	13	10		200 300	600
WSPT 12	24		36	3		1.5	15	12	0 −0.018	200 300 400	800
WSPT 15	31		50	3.5	+0.018 0	2	17.5	13.6		200 300 400	1000
WSPT 20	35	0 −0.016	63	4		2.5	29	18.2	0 −0.021	300 400 500 600	1000

Note (1) The top value of the static rated moment T_M means the value of one nut, and the bottom value represents the value of two nuts in contact.

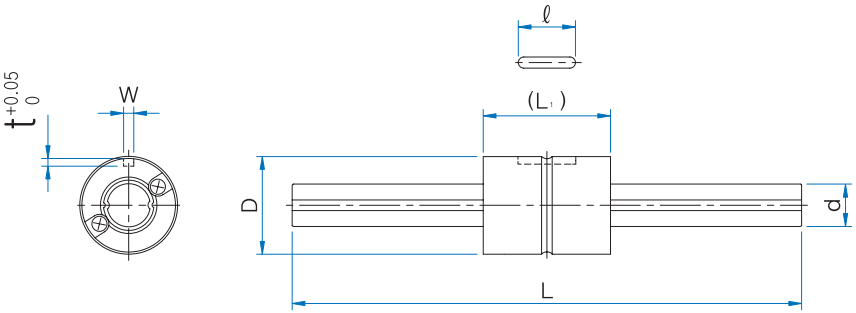

Unit : mm

Basic dynamic load rating	Basic static load rating	Basic dynamic rated torque	Basic static rated torque	Basic static rated moment(1)	Spline nut		Model No.
C N	Co N	T N • m	To N • m	TM N • m	Spline nut g	Spline shaft g/100mm	
441	637	0.588	0.784	0.882 6.272	2.5	9.6	WSPT 4(2)
686	882	0.882	1.372	1.47 11.368	4.8	14.9	WSPT 5
1176	2156	0.98	1.96	4.9 35.57	8.9	19	WSPT 6
1470	2548	1.96	2.94	5.88 43.12	15.9	39	WSPT 8
2842	4900	3.92	7.84	15.68 96.04	31.5	60.5	WSPT 10
3528	5782	5.88	10.78	19.20 135.24	44	87.5	WSPT 12
7056	12642	31.36	34.30	66.84 385.14	59.5	111	WSPT 30
10192	17836	56.84	55.86	115.64 686.0	130	202	WSPT 40

1N≒0.102kgf

WSPTF Series

An example of the Composition of Model Name & Number

2	WSPTF6			—	S	300	CM	H		
1	2	3	4		5	6	7	8	9	10

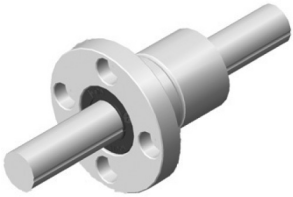

1 Number of nuts assembled in one shaft
2 Model No.
3 Material of nut: No symbol-Standard material/M-Stainless
4 No symbol-Standard nut / E-Special nut specification
5 Type of shaft: S-Solid / H-Hollow
6 Length of shaft
7 Symbol of clearance : CL-No preload / CM-Standard / CT-Light preload
8 Symbol of precision : No symbol-Normal / H-Precision / P-Super
9 Material of shaft : No symbol-Standard material / M-Stainless
10 No symbol-Standard shaft / E-Special shaft specification

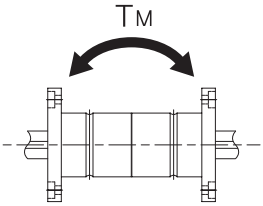

Model No.	Major dimensions										
	Outside diameter		L_1	D_1	T	pcd	X x Y x Z	Axial diameter		Length L	Max. length
	D	Tolerance						d	Tolerance		
WSPTF 6	14	0 -0.011	25	30	5	22	3.4 x 6.5 x 3.3	6	0 -0.012	150 200	300
WSPTF 8	16	0 -0.013	25	32	5	24	3.4 x 6.5 x 3.3	8		150 200 250	500
WSPTF 10	21		33	42	6	32	4.5 x 8 x 4.4	10		200 300	600
WSPTF 12	24	0 -0.016	36	44	7	33	4.5 x 8 x 4.4	12	0 -0.015	200 300 400	800
WSPTF 15	31		50	51	7	40	4.5 x 8 x 4.4	13.6		200 300 400	1000
WSPTF 20	35		63	58	9	45	5.5 x 9.5 x 5.4	18.2	0 -0.018	300 400 500 600	1000

Note (1) The top value of the static rated moment T_M means the value of one nut, and the bottom value represents the value of two nuts in contact.

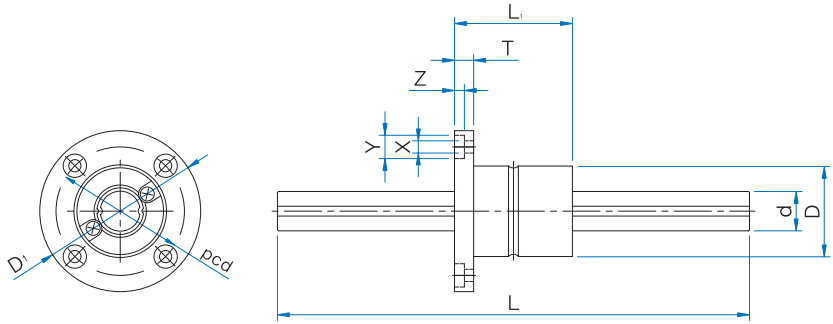

Unit : mm

Basic dynamic load rating	Basic static load rating	Basic dynamic rated torque	Basic static rated torque	Basic static rated moment(1)	Spline nut		Model No.
C N	Co N	T N • m	To N • m	TM N • m	Spline nut g	Spline shaft g/100mm	
1176	2156	0.98	1.96	4.9 35.57	37.2	19	WSPTF 6
1470	2548	1.96	2.94	5.88 43.12	39.5	39	WSPTF 8
2842	4900	3.92	7.84	15.68 96.04	64.2	60.5	WSPTF 10
3528	5782	5.88	10.78	19.20 135.24	124.7	87.5	WSPTF 12
7056	12642	31.36	34.30	66.64 385.14	265.7	111	WSPTF 15
10192	17836	56.84	55.86	115.64 686	392.5	202	WSPTF 20

1N≒0.102kgf

WSPF Series

An example of the Composition of Model Name & Number

2	WSPF6			–	S	300	CM	H		
1	2	3	4		5	6	7	8	9	10

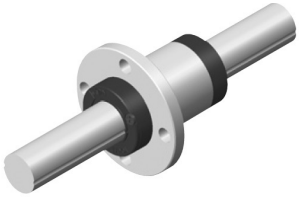

1 Number of nuts assembled in one shaft
2 Model No.
3 Material of nut: No symbol-Standard material/M-Stainless
4 No symbol-Standard nut / E-Special nut specification
5 Type of shaft: S-Solid / H-Hollow
6 Length of shaft
7 Symbol of clearance : CL-No preload / CM-Standard / CT-Light preload
8 Symbol of precision : No symbol-Normal / H-Precision / P-Super
9 Material of shaft : No symbol-Standard material / M-Stainless
10 No symbol-Standard shaft / E-Special shaft specification

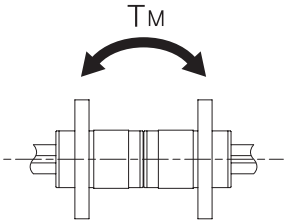

Model No.	Major dimensions												
	Outside diameter		L_1	L_2	D_1	E	T	pcd	d_1	Axial diameter		Length	Max. length
	D	Tolerance								d	Tolerance	L	
WSPF 5	10	0 -0.009	17.5	8.9	23	7	2.7	17	3.4	5	0 -0.012	100 150	200
WSPF 6	12	0 -0.011	20.6	12	25	7	2.7	19	3.4	6		150 200	300
WSPF 8	15		24.4	14	28	9	3.8	22	3.4	8	0 -0.015	150 200 250	500
WSPF 10	19	0 -0.013	29.6	17.8	36	10	4.1	28	4.5	10		200 300	600
WSPF 12	21		34.7	22.7	38	10	4	30	4.5	12	0 -0.018	200 300 400	800
WSPF 15	23		40	27	40	11	4.5	32	4.5	13.6		200 300 400	1000
WSPF 20	30	0 -0.016	50	33	46	14	5.5	38	4.5	18.2	0 -0.021	300 400 500 600	1000
WSPF 25	37		60	39.2	57	17	6.6	47	5.5	22.6		300 400 500 600 800	1200
WSPF 30	45		70	43	65	21	7.5	54	6.6	27.2		400 500 600 700 1100	
WSPF 40	60	0 -0.019	100	70.8	93	26.6	12	73	9	37.2	0 -0.025		

Note (1) The top value of the static rated moment T_M means the value of one nut, and the bottom value represents the value of two nuts in contact.

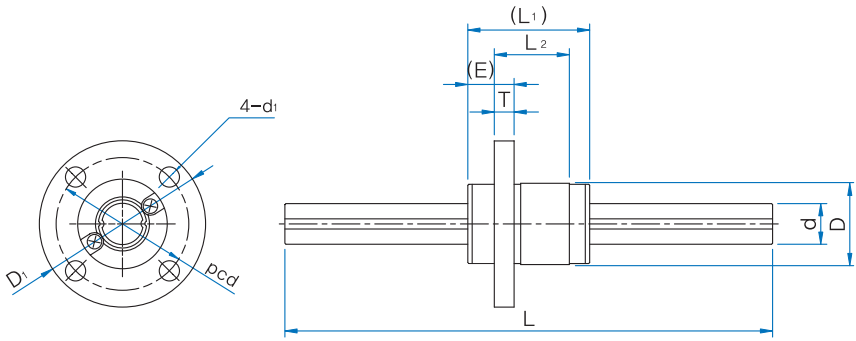

Unit : mm

Basic dynamic load rating	Basic static load rating	Basic dynamic rated torque	Basic static rated torque	Basic static rated moment(1)	Spline nut		Model No.
C N	Co N	T N • m	To N • m	TM N • m	Spline nut g	Spline shaft g/100mm	
588	637	1.764	1.96	1.078 7.84	8.9	14.9	WSPF 5
715.4	853	2.45	3.038	1.764 11.76	13.9	19	WSPF 6
1176	1372	5.488	6.174	3.234 21.56	23.5	39	WSPF 8
1862	2156	10.78	12.74	6.958 41.16	45	60.5	WSPF 10
2156	2646	14.70	18.62	10.78 58.80	59	87.5	WSPF 12
4214	6076	31.36	45.08	27.44 151.90	77	111	WSPF 15
6566	9016	65.66	90.16	49.00 287.14	150	202	WSPF 20
11196	14294	138.94	177.93	92.76 550.78	255	310	WSPF 25
15349	19392	230.91	291.88	146.94 873.65	476	450	WSPF 30
21291	31587	425.83	631.75	363.85 1939.22	962	808	WSPF 40

1N≒0.102kgf

WSPFL Series

An example of the Composition of Model Name & Number

2	WSPFL6			–	S	300	CM	H		
1	2	3	4		5	6	7	8	9	10

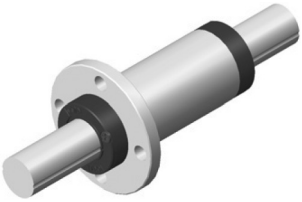

1. Number of nuts assembled in one shaft
2. Model No.
3. Material of nut: No symbol-Standard material/M-Stainless
4. No symbol-Standard nut / E-Special nut specification
5. Type of shaft: S-Solid / H-Hollow
6. Length of shaft
7. Symbol of clearance : CL-No preload / CM-Standard / CT-Light preload
8. Symbol of precision : No symbol-Normal / H-Precision / P-Super
9. Material of shaft : No symbol-Standard material / M-Stainless
10. No symbol-Standard shaft / E-Special shaft specification

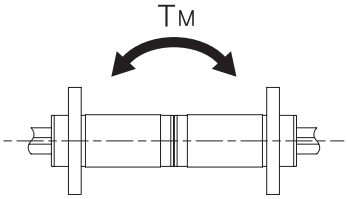

Model No.	Major dimensions												
	Outside diameter		L_1	L_2	D_1	E	T	pcd	d_1	Axial diameter		Length	Max. length
	D	Tolerance								d	Tolerance	L	
WSPFL 5	10	0 −0.009	26	17.4	23	7	2.7	17	3.4	5	0 −0.012	100 150	200
WSPFL 6	12	0 −0.011	29.8	21.2	25	7	2.7	19	3.4	6		150 200	300
WSPFL 8	15		36.7	26.3	28	9	3.8	22	3.4	8	0 −0.015	150 200 250	500
WSPFL 10	19	0 −0.013	47	34.9	36	10	4.1	28	4.5	10		150 200 250	600
WSPFL 12	21		53.1	41.1	38	10	4	30	4.5	12	0 −0.018	200 300	800
WSPFL 15	23		65	52	40	11	4.5	32	4.5	13.6		200 300 400	1000
WSPFL 20	30	0 −0.016	71	54	46	14	5.5	38	4.5	18.2	0 −0.021	300 400 500 600	1000
WSPFL 25	37		84	63.2	57	17	6.5	47	5.5	22.6		300 400 500 600 800	1200
WSPFL 30	45		98	71	65	21	7.5	54	6.5	27.2		400 500 600 700 1100	

Note (1) The top value of the static rated moment T_M means the value of one nut, and the bottom value represents the value of two nuts in contact.

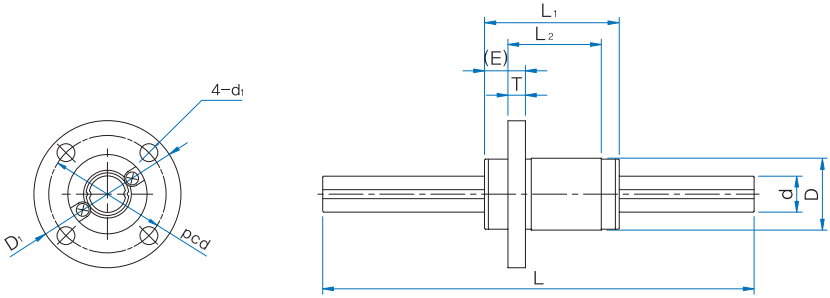

Unit : mm

Basic dynamic load rating	Basic static load rating	Basic dynamic rated torque	Basic static rated torque	Basic static rated moment(1)	Spline nut		Model No.
C N	Co N	T N • m	To N • m	TM N • m	Spline nut g	Spline shaft g/100mm	
882	1176	2.646	3.528	3.136 19.60	12	14.9	WSPFL 5
1078	1470	3.626	5.194	4.998 27.44	19.5	19	WSPFL 6
1764	2450	8.33	11.76	9.80 56.84	34.1	39	WSPFL 8
2842	4018	16.66	23.52	22.54 115.64	70	60.5	WSPFL 10
3234	4802	21.56	33.32	32.34 156.80	91.8	87.5	WSPFL 12
6370	11564	48.02	86.24	94.08 447.86	127.5	111	WSPFL 15
9310	15092	93.10	150.92	127.40 619.36	218	202	WSPFL 20
15394	23191	192.92	289.88	228.91 1189.52	371	310	WSPFL 25
21291	31587	319.84	473.81	363.85 1899.24	680	450	WSPFL 30

1N≒0.102kgf

WSPK Series

An example of the Composition of Model Name & Number

2	WSPK6			—	S	300	CM	H		
1	2	3	4		5	6	7	8	9	10

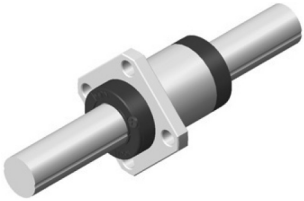

1. Number of nuts assembled in one shaft
2. Model No.
3. Material of nut: No symbol-Standard material/M-Stainless
4. No symbol-Standard nut / E-Special nut specification
5. Type of shaft: S-Solid / H-Hollow
6. Length of shaft
7. Symbol of clearance : CL-No preload / CM-Standard / CT-Light preload
8. Symbol of precision : No symbol-Normal / H-Precision / P-Super
9. Material of shaft : No symbol-Standard material / M-Stainless
10. No symbol-Standard shaft / E-Special shaft specification

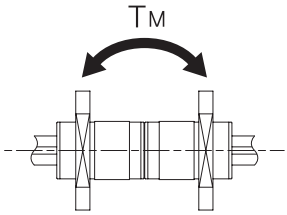

Model No.	Major dimensions													
	Outside diameter		L_1	L_2	D_1	B	E	T	pcd	d_1	Axial diameter		Length	Max. length
	D	Tolerance									d	Tolerance	L	
WSPK 4 (2)	8	0 −0.009	12	7.9	21	10	4.6	2.5	15	3.4	4	0 −0.012	100 150	200
WSPK 5	10		17.5	8.9	23	18	7	2.7	17	3.4	5		100 150	200
WSPK 6	12	0 −0.011	20.6	12	25	20	7	2.7	19	3.4	6		150 200	300
WSPK 8	15		24.4	14	28	22	9	3.8	22	3.4	8	0 −0.015	150 200 250	500
WSPK 10	19	0 −0.013	29.6	17.8	36	28	10	4.1	28	4.5	10		200 300	600
WSPK 12	21		34.7	22.7	38	30	10	4	30	4.5	12	0 −0.018	200 300 400	800
WSPK 15	23		40	27	40	31	11	4.5	32	4.5	13.6		200 300 400	1000
WSPK 20	30	0 −0.016	50	33	46	35	14	5.5	38	4.5	18.2	0 −0.021	300 400 500 600	1000
WSPK 25	37		60	39.2	57	43	17	6.6	47	5.5	22.6		300 400 500 600 800	1200
WSPK 30	45		70	43	65	50	21	7.5	54	6.6	27.2		400 500 600 700 1100	
WSPK 40	60	0 −0.019	100	70.8	93	73	26.6	12	73	9	37.2	0 −0.025		

Note (1) The top value of the static rated moment T_M means the value of one nut, and the bottom value represents the value of two nuts in contact.
(2) WSPK4 has no seal.

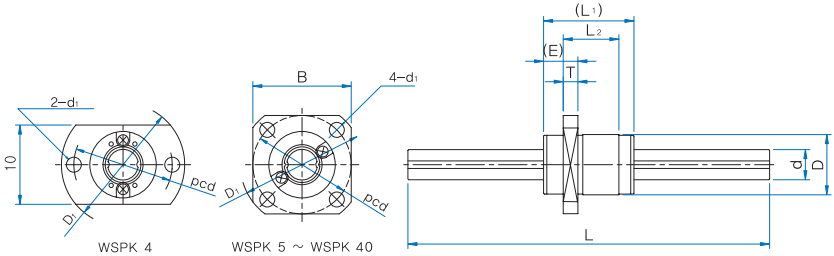

Unit : mm

Basic dynamic load rating	Basic static load rating	Basic dynamic rated torque	Basic static rated torque	Basic static rated moment(1)	Spline nut		Model No.
C N	Co N	T N • m	To N • m	TM N • m	Spline nut g	Spline shaft g/100mm	
303	382	0.686	0.882	0.49 2.94	5.1	9.6	WSPK 4 (2)
588	637	1.764	1.96	1.078 7.84	8.9	14.9	WSPK 5
715.4	852.6	2.45	3.038	1.764 11.76	13.9	19	WSPK 6
1176	1372	5.488	6.174	3.234 21.56	23.5	39	WSPK 8
1862	2156	10.78	12.74	6.958 41.16	45	60.5	WSPK 10
2156	2646	14.70	18.62	10.78 58.80	59	87.5	WSPK 12
4214	6076	31.36	45.08	27.44 151.90	77	111	WSPK 15
6566	9016	65.66	90.16	49.00 287.14	150	202	WSPK 20
11196	14294	138.94	177.93	92.76 550.78	255	310	WSPK 25
15394	19392	230.91	291.88	146.94 873.65	476	450	WSPK 30
21291	31587	425.83	631.75	363.85 1939.22	962	808	WSPK 40

1N≒0.102kgf

WSPKL Series

An example of the Composition of Model Name & Number

2	WSPKL6			–	S	300	CM	H		
1	2	3	4		5	6	7	8	9	10

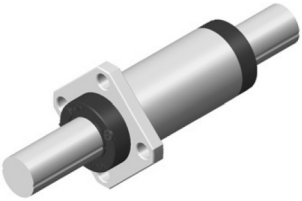

1 Number of nuts assembled in one shaft
2 Model No.
3 Material of nut: No symbol-Standard material/M-Stainless
4 No symbol-Standard nut / E-Special nut specification
5 Type of shaft: S-Solid / H-Hollow
6 Length of shaft
7 Symbol of clearance : CL-No preload / CM-Standard / CT-Light preload
8 Symbol of precision : No symbol-Normal / H-Precision / P-Super
9 Material of shaft : No symbol-Standard material / M-Stainless
10 No symbol-Standard shaft / E-Special shaft specification

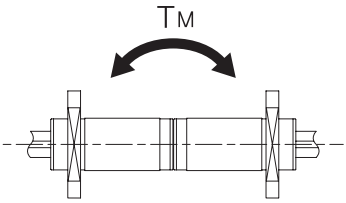

Model No.	Major dimensions													
	Outside diameter		L_1	L_2	D_1	E	B	T	pcd	d_1	Axial diameter		Length	Max. length
	D	Tolerance									d	Tolerance	L	
WSPKL 5	10	0 -0.009	26	17.4	23	7	18	2.7	17	3.4	5	0 -0.012	100 150	200
WSPKL 6	12	0 -0.011	29.8	21.2	25	7	20	2.7	19	3.4	6		150 200	300
WSPKL 8	15		36.7	26.3	28	9	22	3.8	22	3.4	8	0 -0.015	150 200 250	500
WSPKL 10	19	0 -0.013	47	34.9	36	10	28	4.1	28	4.5	10		200 300	600
WSPKL 12	21		53.1	41.1	38	10	30	4	30	4.5	12	0 -0.018	200 300 400	800
WSPKL 15	23		65	52	40	11	31	4.5	32	4.5	13.6		200 300 400	1000
WSPKL 20	30	0 -0.016	71	54	46	14	35	5.5	38	4.5	18.2	0 -0.021	300 400 500 600	1000
WSPKL 25	37		84	63.2	57	17	43	6.6	47	5.5	22.6		300 400 500 600 800	1200
WSPKL 30	45		98	71	65	21	50	7.5	54	6.6	27.2		400 500 600 700 1100	

Note (1) The top value of the static rated moment T_M means the value of one nut, and the bottom value represents the value of two nuts in contact.

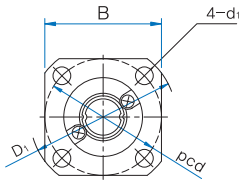

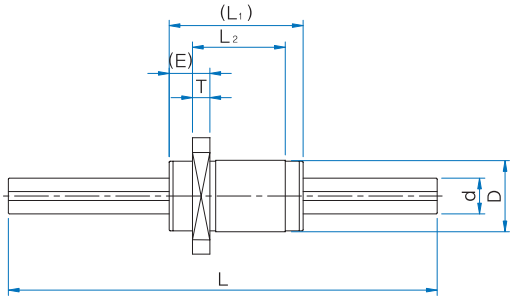

Unit : mm

Basic dynamic load rating	Basic static load rating	Basic dynamic rated torque	Basic static rated torque	Basic static rated moment(1)	Spline nut		Model No.
C N	Co N	T N • m	To N • m	TM N • m	Spline nut g	Spline shaft g/100mm	
882	1176	2.646	3.528	3.136 19.60	12	14.9	WSPKL 5
1078	1470	3.626	5.194	4.998 27.44	19.5	19	WSPKL 6
1764	2450	8.33	11.76	9.80 56.84	34.1	39	WSPKL 8
2842	4010	16.66	23.52	22.54 115.64	70	60.5	WSPKL 10
3234	4802	21.56	33.32	32.34 156.80	91.8	87.5	WSPKL 12
6370	11564	48.02	86.24	94.08 447.86	127.5	111	WSPKL 15
9310	15092	93.10	150.92	127.40 619.36	218	202	WSPKL 20
15394	23191	192.92	289.88	228.91 1189.52	371	310	WSPKL 25
21291	31587	319.87	473.81	363.85 1899.24	680	450	WSPKL 30

1N≒0.102kgf

WSPTO Series

An example of the Composition of Model Name & Number

2	WSPTO16			–	S	300	CM	H		
1	2	3	4		5	6	7	8	9	10

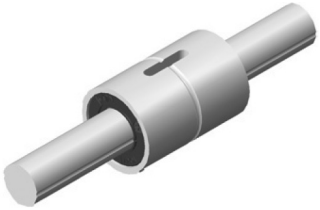

1 Number of nuts assembled in one shaft
2 Model No.
3 Material of nut: No symbol-Standard material/M-Stainless
4 No symbol-Standard nut / E-Special nut specification
5 Type of shaft: S-Solid / H-Hollow
6 Length of shaft
7 Symbol of clearance : CL-No preload / CM-Standard / CT-Light preload
8 Symbol of precision : No symbol-Normal / H-Precision / P-Super
9 Material of shaft : No symbol-Standard material / M-Stainless
10 No symbol-Standard shaft / E-Special shaft specification

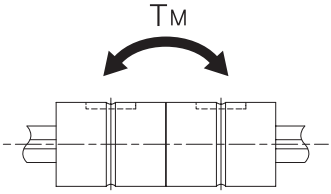

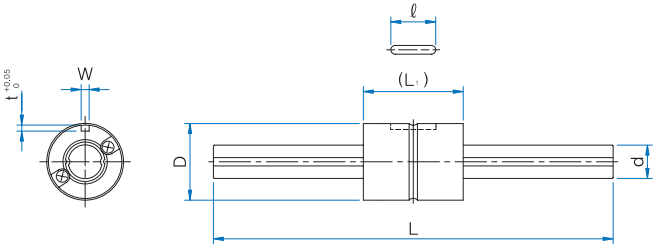

단위 : mm

Model No.	Major dimensions										
	Outside diameter		L_1	Dimension of key groove				Axial diameter		Length L	Max. length
	D	Tolerance		W	Tolerance	t	ℓ	d	Tolerance		
WSPTO 16	31	0 −0.013	50	3.5	+0.018 0	2	17.5	16	0 −0.017	200 300 400	1000
WSPTO 20	35	0 −0.016	63	4		2.5	29	20	0 −0.020	300 400 500 600	1000

Model No.	Basic dynamic load rating	Basic static load rating	Basic dynamic rated torque	Basic static rated torque	Basic static rated moment (1)	Spline nut	
	C N	Co N	T N • m	To N • m	TM N • m	Spline nut g	Spline shaft g/100mm
WSPTO 16	7060	12600	31.4	34.3	67.6	165	160
					393		
WSPTO 20	10200	17800	56.9	55.9	118	225	250
					700		

1N≒0.102kgf

Note (1) The top value of the static rated moment TM means the value of one nut, and the bottom value represents the value of two nuts in contact.

WSPTFO Series

An example of the Composition of Model Name & Number

2	WSPTFO16			—	S	300	CM	H		
1	2	3	4		5	6	7	8	9	10

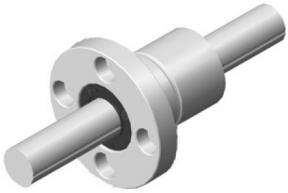

1. Number of nuts assembled in one shaft
2. Model No.
3. Material of nut: No symbol-Standard material/M-Stainless
4. No symbol-Standard nut / E-Special nut specification
5. Type of shaft: S-Solid / H-Hollow
6. Length of shaft
7. Symbol of clearance : CL-No preload / CM-Standard / CT-Light preload
8. Symbol of precision : No symbol-Normal / H-Precision / P-Super
9. Material of shaft : No symbol-Standard material / M-Stainless
10. No symbol-Standard shaft / E-Special shaft specification

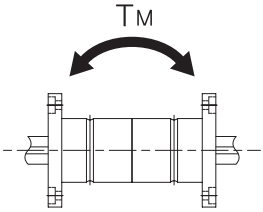

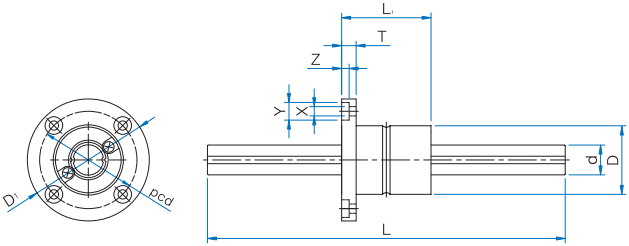

Unit : mm

Model No.	Major dimensions										
	Outside diameter		L1	D1	T	pcd	X x Y x Z	Axial diameter		Length	Max. length
	D	Tolerance						d	Tolerance	L	
WSPTFO 16	31	0 -0.013	50	51	7	40	4.5x8x4.4	16	0 -0.017	200 300 400	1000
WSPTFO 20	35	0 -0.016	63	58	9	45	5.5x9.5x5.4	20	0 -0.020	300 400 500 600	1000

Model No.	Basic dynamic load rating	Basic static load rating	Basic dynamic rated torque	Basic static rated torque	Basic static rated moment (1)	Spline nut	
	C N	Co N	T N • m	To N • m	TM N • m	Spline nut g	Spline shaft g/100mm
WSPTFO 16	7060	12600	31.4	34.3	67.6 393	165	160
WSPTFO 20	10200	17800	56.9	55.9	118 700	225	250

1N≒0.102kgf

Note (1) The top value of the static rated moment TM means the value of one nut, and the bottom value represents the value of two nuts in contact.

10 Linear Ball Spline

1. Structure and Features

WON Linear Ball Spline is composed of a spline shaft with a groove and a nut. The spline nut has a retainer, a seal, and a ball installed in. It supports smooth motion.

2. High load capacity and long life

The raceway surface an R-shape similar to diameter of a ball. Since it is precisely polished, it has a wide area of contact with a ball. Therefore, the device a high load capacity and a long life span.

3. Torque transmission with high precision

The groove of shaft and cylinder adjusts a ball at an appropriate contact angle. Therefore, with one shaft, it is possible to transmit torque.
In addition, by setting the gap of the rotation direction for preload to zero, it is possible to increase rigidity and determine an accurate position of rotation.

4. High speed movement and high speed rotation

The cylinder of a linear ball spline is compact and is balanced well. Therefore, it has good performance in high-speed motion or high-speed rotation.

5. Product components

WON Linear Ball Spline has eight different types (8 to 40) of sizes, and has two different types of nut shapes (cylinder type: WLS, flange type: WLSF).
※ If you need a linear ball spline with a different material, please contact us.

6. Easy further processing

WON Linear Ball Spline has a groove installed in its round shaft. Therefore, the device supports multiple types of processing easily and is applicable in wide areas.

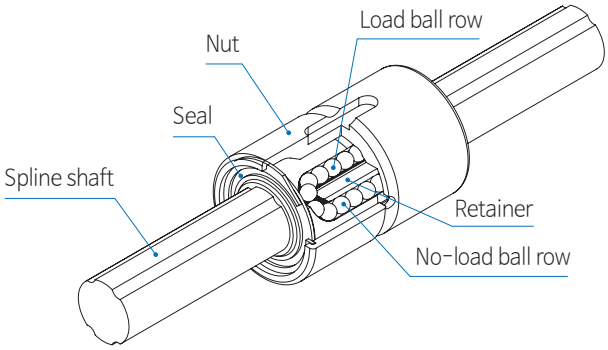

Figure 12. Structure of linear ball spline

Classification	Type	Shape and Features	
Cylinder Type	WLS		It has a general spline nut that has a key groove helping to fix the position of a rotational direction accurately.
Flange Type	WLSF	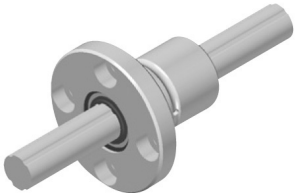	Flange Type – As a round flange type, it can be installed easily.

※ It is possible to select a different type of WON Linear Ball Spline depending on a use. A seal is basically installed in any type of nut.

WLS Series

An example of the Composition of Model Name & Number

2	WLS8			–	S	400	CM	H		
1	2	3	4		5	6	7	8	9	10

1 Number of nuts assembled in one shaft
2 Model No.
3 Material of nut: No symbol-Standard material/M-Stainless
4 No symbol-Standard nut / E-Special nut specification
5 Type of shaft: S-Solid / H-Hollow
6 Length of shaft
7 Symbol of clearance : CL-No preload / CM-Standard / CT-Light preload
8 Symbol of precision : No symbol-Normal / H-Precision / P-Super
9 Material of shaft : No symbol-Standard material / M-Stainless
10 No symbol-Standard shaft / E-Special shaft specification

Model No.	Major dimensions										
	Outside diameter		Length		Dimension of key groove				O	Axial diameter	
	D	Tolerance	L_1	Tolerance	W	Tolerance	t	ℓ		d	Tolerance
WLS 8	16	0 −0.011	25	0 −0.011	2.5	+0.014 0	1.2	10.5	1.5	8	0 −0.015
WLS 10	21	0 −0.013	33		3		1.5	13	1.5	10	
WLS 13	24		36		3		1.5	15	1.5	13	0 −0.018
WLS 16	31	0 −0.016	50		3.5	+0.018 0	2	17.5	2	16	
WLS 20	35		63		4		2.5	29	2	20	0 −0.021
WLS 25	42		71	0 −0.019	4		2.5	36	3	25	
WLS 30	47		80		4		2.5	42	3	30	
WLS 40	64	0 −0.019	100		6		3.5	52	4	40	0 −0.025

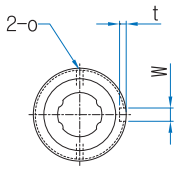

WLS 8~13

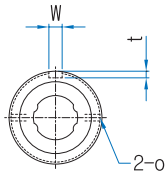

WLS 16~40

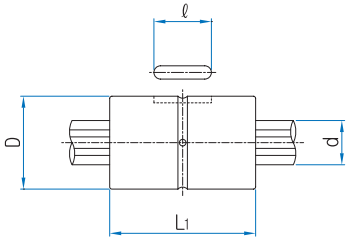

Unit : mm

Basic dynamic load rating	Basic static load rating	Basic dynamic rated torque	Basic static rated torque	Basic static rated torque	Spline nut		Model No.
C N	Co N	T N • m	To N • m	TM N • m	Spline nut g	Spline shaft g/100mm	
1,450	2,870	2.1	3.7	7.4	23	38	WLS 8
2,730	5,070	4.4	8.2	18.0	54	60	WLS 10
2,670	4,890	21	39.2	13.7	70	100	WLS 13
6,120	11,200	60	110	46	150	150	WLS 16
8,900	16,300	105	194	110	220	240	WLS 20
12,800	23,400	189	346	171	330	370	WLS 25
18,600	23,200	307	439	181	360	540	WLS 30
30,800	37,500	647	934	358	950	960	WLS 40

1N≒0.102kgf

WLSF Series

An example of the Composition of Model Name & Number

2	WLSF8			—	S	400	CM	H		
1	2	3	4		5	6	7	8	9	10

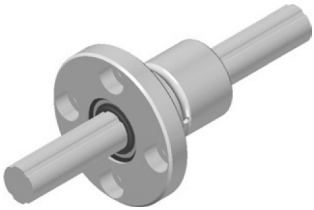

1. Number of nuts assembled in one shaft
2. Model No.
3. Material of nut: No symbol-Standard material/M-Stainless
4. No symbol-Standard nut / E-Special nut specification
5. Type of shaft: S-Solid / H-Hollow
6. Length of shaft
7. Symbol of clearance : CL-No preload / CM-Standard / CT-Light preload
8. Symbol of precision : No symbol-Normal / H-Precision / P-Super
9. Material of shaft : No symbol-Standard material / M-Stainless
10. No symbol-Standard shaft / E-Special shaft specification

Model No.	Major dimensions											
	Outside diameter		Length		D_1	T	PCD	X x Y x Z	L_2	o	Axial diameter	
	D	Tolerance	L_1	Tolerance							d	Tolerance
WLSF 8	16	0 -0.011	25	0 -0.2	32	5	24	3.4x6.5x3.3	7.5	1.5	8	0 -0.015
WLSF 10	21	0 -0.013	33		42	6	32	4.5x8x4.4	10.5	1.5	10	
WLSF 13	24		36		44	7	33	4.5x8x4.4	11	1.5	13	0 -0.018
WLSF 16	31	0 -0.016	50		50	7	40	4.5x8x4.4	18	2	16	
WLSF 20	35		63		58	9	45	5.5x9.5x5.4	22.5	2	20	0 -0.021
WLSF 25	42		71	0 -0.3	65	9	52	5.5x9.5x5.4	26.5	3	25	
WLSF 30	47		80		75	10	60	6.6x11x6.5	30	3	30	
WLSF 40	64	0 -0.019	100		100	14	82	9x14x8.6	36	4	40	0 -0.025

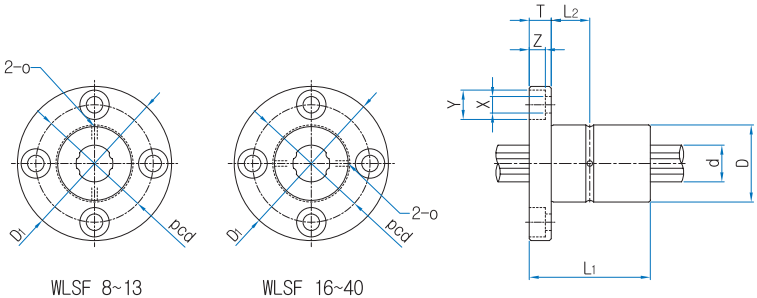

WLSF 8~13 WLSF 16~40

Unit : mm

Basic dynamic load rating	Basic static load rating	Basic dynamic rated torque	Basic static rated torque	Basic static rated torque	Spline nut		Model No.
C N	Co N	T N • m	To N • m	TM N • m	Spline nut g	Spline shaft g/100mm	
1,450	2,870	2.1	3.7	7.4	42	38	WLSF 8
2,730	5,070	4.4	8.2	18.0	94	60	WLSF 10
2,670	4,890	21	39.2	13.7	100	100	WLSF 13
6,120	11,200	60	110	46	200	150	WLSF 16
8,900	16,300	105	194	110	330	240	WLSF 20
12,800	23,400	189	346	171	450	370	WLSF 25
18,600	23,200	307	439	181	550	540	WLSF 30
30,800	37,500	647	934	358	1,410	960	WLSF 40

1N≒0.102kgf

WON

LINEAR MOTION SYSTEM

Cross Roller Guide Way
Contents

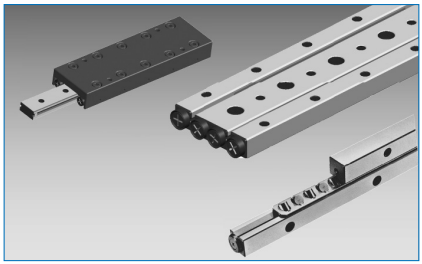

1 Structure and Features of Cross Roller Guide Way

WON Cross Roller Guide Way is composed of the race rail and roller cage precisely polished. For use, the roller cages assembled in the reverse direction of precise roller are put together with the 90 ˚ V grooved raceway surface of a race rail. The device has the non-circular and highly-precise linear motion system with low frictional resistance. It is mainly applied to electric discharge machine, optical equipment, measuring equipment, and electronic parts assembly & inspection equipment.

1. Precise and fine linear motion

A cross roller guide way has very low frictional resistance and almost no static and dynamic frictional resistance. Therefore, it supports precise and fine linear motion, obtaining stable linear motion in the conditions of light load and low speed.

2. Low noise

WON Cross Roller Guide Way has a non-circular linear motion system. Therefore, it has no noise of circulation part. Since its roller cage supports a roller at a certain interval, the device runs smoothly without any noise of contact between rollers. .

3. High load capacity

Since a cross roller guide way uses a precise roller as a rolling element, it has high rigidity and a high load capacity.

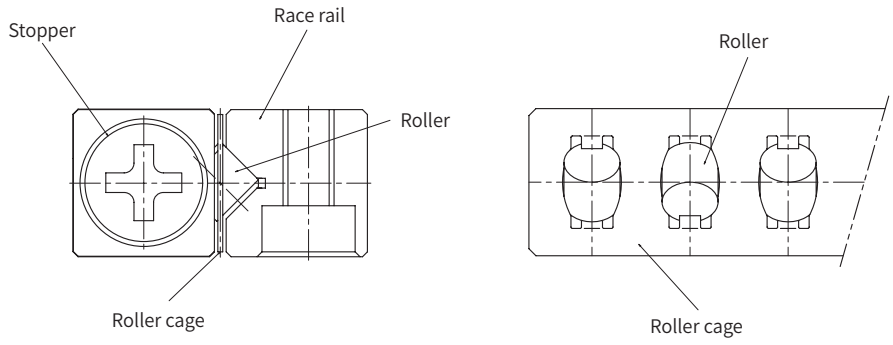

Figure 1. Structure of cross roller guide way

2 WON Anti-Creep Structures and Features of Anti-Creep Cross Roller Guide Way

Won Anti-Creep Cross Roller Guide Way is the product with the rack and pinion gear built in a conventional cross roller guide way. Therefore, it has very high precision and the anti-creep protection.

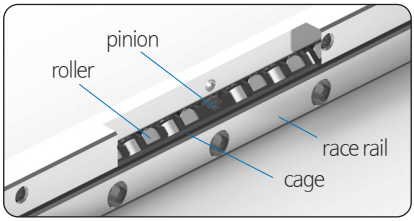

Structure of WON Anti-Creep cross roller guide way

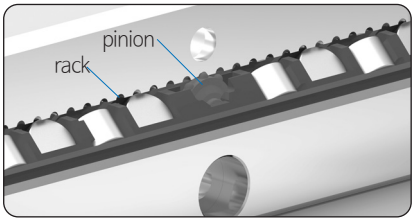

Details of Anti-Creep Part

1. Responses to multiple types of operation

The anti-creep function makes it possible to respond to very high deceleration and acceleration. Unlike a conventional cross roller guide way, this device is safely applicable in difficult service conditions like vertical axis.

2. Low noise and smooth motion

This product adopts a resin cage, rather than a steel cage applied to our other products, in order to minimize the noise of friction between a case and a roller and to implement quit and smooth running.

3. High load capacity based on complete compatibility of installation dimensions

The same installation dimension as the general cross roller guide and has a specialized design with increased rated load, so it can be replaced with a high load capacity without any inconvenience.

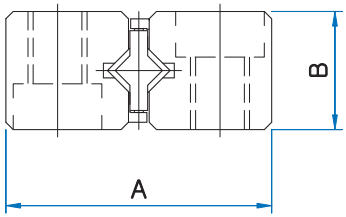

Anti-creep Cross Roller Guide Way

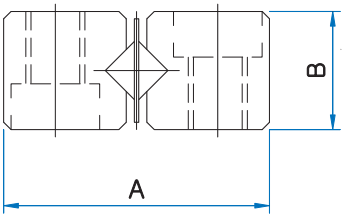

Normal Cross Roller Guide Way

Figure 2. Dimensional Compatibility

3 Types and Features

Classification	Type	Shape and Feature	
Guide	Roller Cage		In WRG type, the roller cage with the precision rollers crossed at a right angle is put together with the 90 ˚ V-grooved raceway of an exclu sive rail. By mounting two-roll roller guides in parallel, it is possible to bear any load in all directions, which is imposed on the shaft at a right angle. In addition, since preload can be applied simply, the cross roller guide way can become a light sliding device with no clearance and high rigi dity.
	WRG WRGO WRG-AC	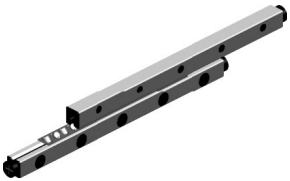	
	WRGW		
Table	WRGT		A cross roller table is the compact, highly precise and highly rigid unit guiding a finite linear line. A cross rolle r guide way is put in between a highly precise table and the base.
	WRGU WRGU-AC		

4 Precision

Precision of WON Cross Roller Guide Way is classified into normal, precision, and super precision types.

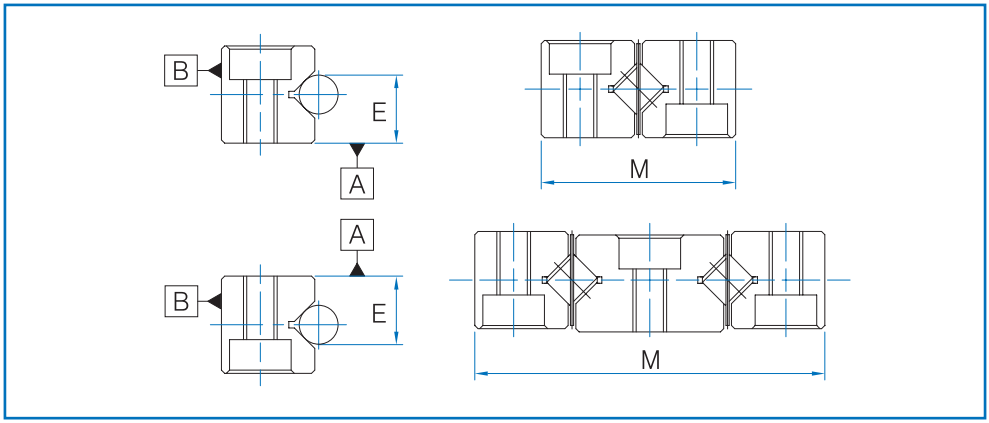

Table 1. Precision of each part of the race rail Unit : mm

Class of precision / Item \ Symbol	Normal	Precision	Super Precision
	No symbol	H	P
Parallelism of the race rail for ⓐ&ⓑ sides	See Table 2.		
Dimensional tolerance of the height E	±0.02		±0.01
Difference of the height E	0.02	0.01	0.005
Tolerance of M	0 −0.2		0 −0.1

Note) The difference of the height E is applied to four race rails used on the same plane.

Table 2. Parallelism of the race rail for ⓐ&ⓑ sides Unit : μm

Length of race rail \ Class of precision	Normal (No symbol)	Precision (H)	Super Precision (P)
Length > 200	8	4	2
200 ≤ length > 400	10	5	3
400 ≤ length > 600	14	7	4
600 ≤ length > 800	15	9	5
800 ≤ length	20	10	5

5 Load rating and life

As for the basic load rating C and Co, the basic load rating of the running-roller count (Z) actually applied is calculated with the basic load rating Cz and Coz equivalent to one running roller.

Basic dynamic load rating

$$C = \left(\frac{Z}{2}\right)^{\frac{3}{4}} \cdot Cz$$

Basic static load rating

$$Co = \left(\frac{Z}{2}\right) \cdot Coz$$

※ $\left(\frac{Z}{2}\right)$ = Removal of decimals

Rating life refers to a total travel distance that 90% in one group of linear motion systems, each of which runs under the same condition, can reach without flaking. After the basic dynamic load rating is calculated in the above formula, it is possible to calculate the life of a cross roller guide way in the following formula.

$$L = \left[\left(\frac{f_H \cdot f_T}{f_W}\right) \cdot \left(\frac{C}{P_C}\right)\right]^{\frac{10}{3}} \cdot 100$$

Where L : basic load rating (km)
C : basic dynamic load rating (kN)
Pc : Calculated load (kN)
fH : Hardness factor
fT : Temperature factor
fw : Load factor

If stroke length and the number of strokes per minute are given, it is possible to calculate a service life in the following formula.

$$L_h = \frac{L \times 10^3}{2 \times \ell_s \times n_1 \times 60}$$

Where Lh : Rating life (hr)
ℓs : Stroke length (m)
n1 : Number of strokes per minute (o.p.m.)

Table 3. Hardness factor

A type of race rail	f_H
Carbon steel race rail	1
Stainless steel race rail	0.8

Table 4. Temperature factor

Temperature of linear motion system (°C)	f_T
100	1.00
120	0.97
140	0.93
160	0.88
180	0.82

Table 5. Load factor

Impacts & vibration	Velocity (V)	Measured value of vibration (G)	f_W
No external impacts and vibration	Low speed V≦ 15m/mim	G≦ 0.5	1.0 ~ 1.5
Very weak impacts and vibration	Middle speed 15< V≦ 60m/mim	0.5≦ G≦ 1.0	1.5 ~ 2.0
External impacts and vibration	High speed V > 60m/mim	1.0≦ G≦ 2.0	2.0 ~ 3.5

6 Preload

If a cross roller guide way has no appropriate level of preload, it is impossible to obtain the precision needed, or it is possible to cause scratches or shorten its service life. Therefore, fasten an adjustment bolt by checking an allowable preload level.
(* Adjust an adjustment bolt in the same line with a roller.)

Table 6. Allowable preload level of roller cage in the row 1 Unit : μm

Model No.	R1	R2	R3	R4	R5	R9
Allowable preload	−2	−3	−4	−5	−7	−10

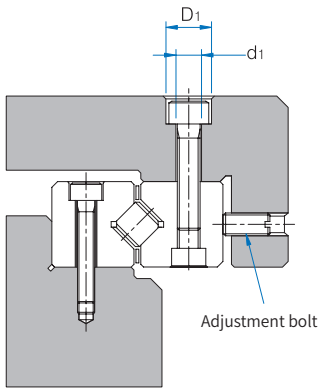

Figure 3. An example of preload adjustment

7 Precision of mounting surface

To obtain a certain level of travel precision, it is required for the mounting face of a race rail to secure more than a level of precision described in Table 1. Generally, polishing process is applied.

8 How to install

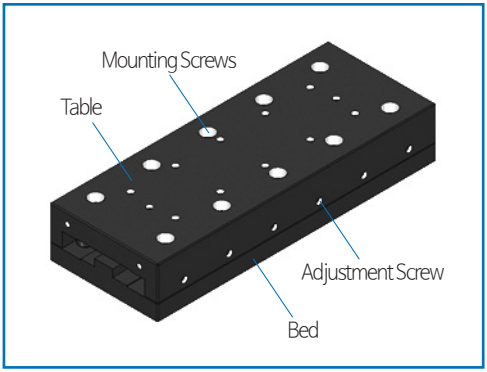

1) Prepare the table and bed

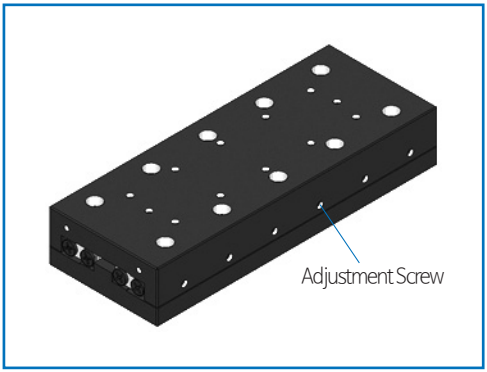

2) Place the track board in the center position of the table and bed and lightly tighten the adjustment screw to leave little gap.

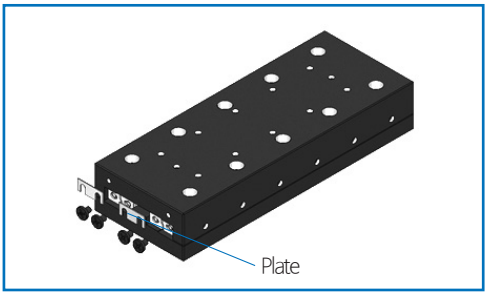

3) Lightly tighten the mounting screws on the table, bed, and the track board. For Anti-Creep Cross Roller Guide Way, release the screws at the end of the track board to remove the binding plate. Re-tighten the screws at the end of the track board.

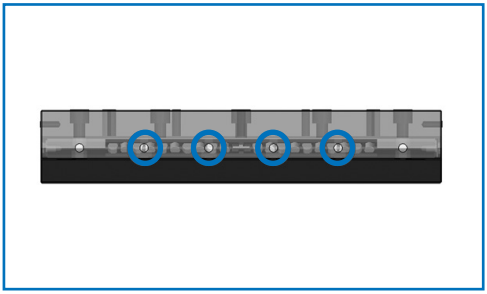

4) Center the cage and set the dial gauge as shown in Figure 3. Lightly tighten the adjustment screws in the cage length area to set the dial gauge to zero.

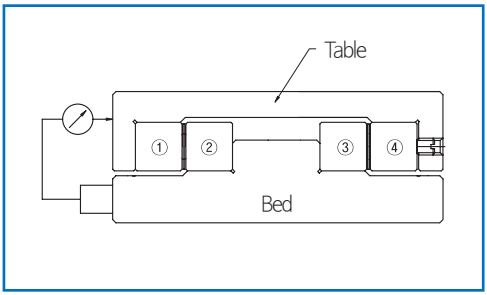

5) Adjust the preload amount by evenly tightening the adjustment bolt at the center with a torque wrench or the like until the dial gauge shows a certain amount of displacement.

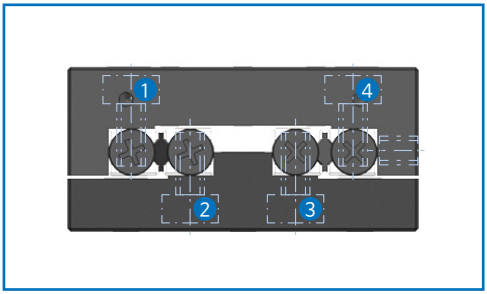

6) Fix the mounting screws on track 1, 2, and 3 and check with the dial gauge to see if they are within the prescribed value. If the level is not high, repeat installation methods 4 to 7.

7) Finally, secure the mounting screw for track 4 in Figure.

9 Lubrication and Dust Proof

WON Cross Roller Guide Way (WRGT, WRGU) is already filled with lithium grease. If you need to refill, it is recommended to use the same type of grease.
If a large amount of foreign substances or dust float, or if a cross roller guide way is exposed to relatively big foreign substances like cutting tips or sand, it is recommended to attach a cover to protect the device.

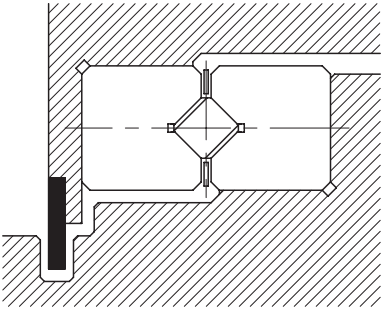

Figure 4.

10 Caution for Use

1. Installation

If the mounting surface is polished with lower than a required level of precision, or an inappropriate preload level is applied, a race rail can face torsion. In this case, asymmetric load, race rail wear, and a shortened service life occur. Therefore, it is recommended to meet the required precision of the polished surface and level of preload.

2. Stopper

Stoppers are installed on both ends of a race rail only for the purpose of preventing the separation of a roller cage. Therefore, it is required to install a table stopper separately.

3. Use of an equal set

As for WON Cross Roller Guide Way, WRG type has one set of four race rails, and WRGW type one set of three race rails.
The V-groove difference of each type is adjusted in the set. Therefore, a combination of different sets can cause an error that degrades precision and shortens a service life. Be careful.

4. Handling

The WON cross roller guideway is meticulously crafted, necessitating careful handling.
In the absence of an Anti-Creep cross roller guideway, there's a risk of the roller cage slipping and tilting to one side due to uneven loads and irregular movement. Therefore, it's essential to periodically move it across its full stroke to adjust the position of the roller cage.

Roller Cage

An example of the composition of model name & number

R6 — 13Z

1 Model No.
2 Number of rollers

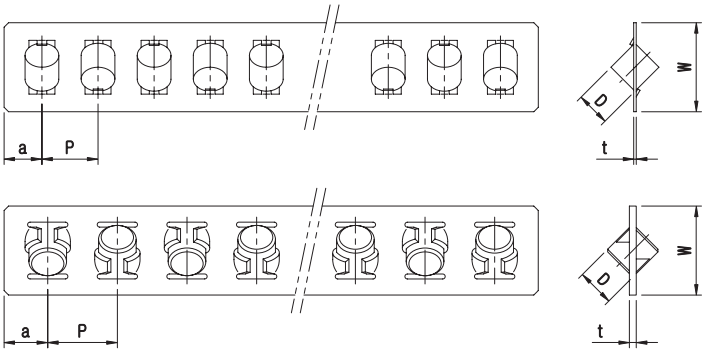

Unit : mm

Model No.	D	t	W	P	a	Cz (kN)	Coz (kN)
R1	1.5	0.2	3.8	2.5	2	0.152	0.153
R2	2	0.25	5	4	2.5	0.276	0.271
R3	3	0.3	7	5	3	0.639	0.611
R4	4	0.3	10.5	7	4.5	1.38	1.35
R6	6	0.6	13.5	10	6	3.78	3.78
R9	9	1.0	19	14	7.5	9.53	9.48

1N ≒ 0.102kgf

WRG Type

An example of the composition of model name & number

WRG2 — 150 [ ] H — 26Z
1 2 3 4 5

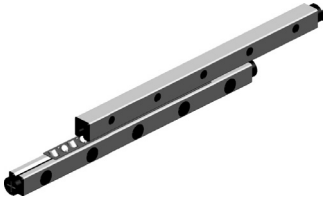

1 Model No.
2 Length of race rail
3 No symbol –Standard race rail / E-Special specification of race rail
4 Symbol of precision: No symbol – Normal / H-Precision / P-Super precision
5 Number of rollers

Model No.	Max. stroke	D	No. of rollers Z	Main dimensions					
				L	A	B	C	M x P	N
WRG 1020	12		5	20				1X10	
WRG 1030	22		7	30				2X10	
WRG 1040	27		10	40				3X10	
WRG 1050	32	1.5	13	50	8.5	4	3.8	4X10	5
WRG 1060	37		16	60				5X10	
WRG 1070	42		19	70				6X10	
WRG 1080	52		21	80				7X10	
WRG 2030	18		5	30				1X15	
WRG 2045	24		8	45				2X15	
WRG 2060	30		11	60				3X15	
WRG 2075	44		13	75				4X15	
WRG 2090	50		16	90				5X15	
WRG 2105	64	2	18	105	12	6	5.5	6X15	7.5
WRG 2120	70		21	120				7X15	
WRG 2135	84		23	135				8X15	
WRG 2150	90		26	150				9X15	
WRG 2165	96		29	165				10X15	
WRG 2180	102		32	180				11X15	
WRG 3050	28		7	50				1X25	
WRG 3075	48		10	75				2X25	
WRG 3100	58		14	100				3X25	
WRG 3125	78		17	125				4X25	
WRG 3150	88		21	150				5X25	
WRG 3175	108		24	175				6X25	
WRG 3200	118	3	28	200	18	8	8.3	7X25	12.5
WRG 3225	138		31	225				8X25	
WRG 3250	148		35	250				9X25	
WRG 3275	168		38	275				10X25	
WRG 3300	178		42	300				11X25	
WRG 3325	198		45	325				12X25	
WRG 3350	208		49	350				13X25	

Note (1) 1 SET (Race rail: 4EA, Roller cage: 2EA, Stopper: 8EA)
(2) Basic load rating is based on 1 set.

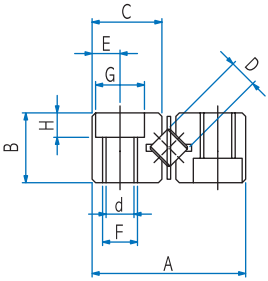

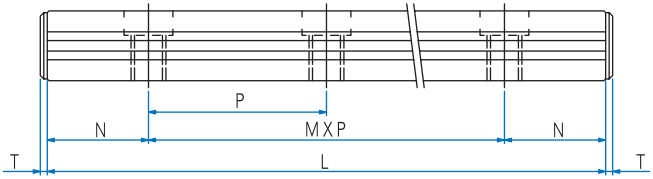

Unit : mm

Dimensions						Basic load rating		Mass (g/set)	Model No.
E	F	d	G	H	T	Dynamic C (kN)	Static Co (kN)		
1.8	M2	1.65	3	1.4	1.5	0.46	0.61	9	WRG 1020
						0.63	0.92	13	WRG 1030
						0.95	1.53	18	WRG 1040
						1.09	1.84	22	WRG 1050
						1.37	2.45	26	WRG 1060
						1.50	2.75	30	WRG 1070
						1.63	3.06	35	WRG 1080
2.5	M3	2.55	4.4	2	2	0.84	1.08	28	WRG 2030
						1.46	2.17	43	WRG 2045
						1.74	2.71	57	WRG 2060
						2.01	3.25	71	WRG 2075
						2.52	4.34	85	WRG 2090
						2.76	4.88	98	WRG 2105
						3.00	5.42	112	WRG 2120
						3.23	5.96	126	WRG 2135
						3.68	7.05	140	WRG 2150
						3.90	7.59	153	WRG 2165
						4.32	8.67	166	WRG 2180
3.5	M4	3.30	6	3.1	2.5	2.71	3.67	98	WRG 3050
						4.06	6.11	148	WRG 3075
						5.28	8.55	195	WRG 3100
						5.86	9.78	242	WRG 3125
						6.98	12.2	289	WRG 3150
						8.05	14.7	336	WRG 3175
						9.08	17.1	384	WRG 3200
						9.58	18.33	431	WRG 3225
						10.56	20.8	478	WRG 3250
						11.52	23.2	525	WRG 3275
						12.45	25.7	572	WRG 3300
						12.91	26.9	619	WRG 3325
						13.82	29.3	647	WRG 3350

1N ≒ 0.102kgf

WRG Type

An example of the composition of model name & number

WRG4 — 400 [ ] H — 39Z
1 2 3 4 5

1 Model No.
2 Length of race rail
3 No symbol –Standard race rail / E-Special specification of race rail
4 Symbol of precision: No symbol – Normal / H-Precision / P-Super precision
5 Number of rollers

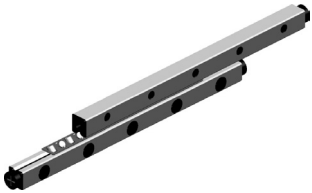

Model No.	Max. stroke	D	No. of rollers Z	Main dimensions					
				L	A	B	C	M x P	N
WRG 4080	58	4	7	80	22	11	10.2	1 X 40	20
WRG 4120	82		11	120				2 X 40	
WRG 4160	106		15	160				3 X 40	
WRG 4200	130		19	200				4 X 40	
WRG 4240	154		23	240				5 X 40	
WRG 4280	178		27	280				6 X 40	
WRG 4320	202		31	320				7 X 40	
WRG 4360	226		35	360				8 X 40	
WRG 4400	250		39	400				9 X 40	
WRG 4440	274		43	440				10 X 40	
WRG 4480	298		47	480				11 X 40	
WRG 6100	56	6	7	100	31	15	14.2	1 X 50	25
WRG 6150	96		10	150				2 X 50	
WRG 6200	136		13	200				3 X 50	
WRG 6250	156		17	250				4 X 50	
WRG 6300	196		20	300				5 X 50	
WRG 6350	216		24	350				6 X 50	
WRG 6400	256		27	400				7 X 50	
WRG 6450	276		31	450				8 X 50	
WRG 6500	316		34	500				9 X 50	
WRG 6550	336		38	550				10 X 50	
WRG 6600	376		41	600				11 X 50	
WRG 9200	118	9	10	200	44	22	20.2	1 X 100	50
WRG 9300	178		15	300				2 X 100	
WRG 9400	238		20	400				3 X 100	
WRG 9500	298		25	500				4 X 100	
WRG 9600	358		30	600				5 X 100	
WRG 9700	418		35	700				6 X 100	
WRG 9800	478		40	800				7 X 100	
WRG 9900	538		45	900				8 X 100	
WRG 91000	598		50	1000				9 X 100	

Note (1) 1 SET (Race rail: 4EA, Roller cage: 2EA, Stopper: 8EA)
(2) Basic load rating is based on 1 set.

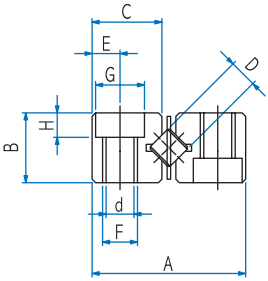

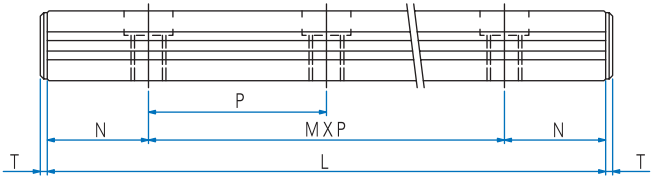

Unit : mm

Dimensions						Basic load rating		Mass (g/set)	Model No.
E	F	d	G	H	T	Dynamic C (kN)	Static Co (kN)		
4.5	M5	4.3	8	4.2	2.5	5.92	8.10	260	WRG 4080
						8.85	13.5	400	WRG 4120
						11.5	18.9	530	WRG 4160
						14.0	24.3	660	WRG 4200
						16.4	29.7	790	WRG 4240
						18.7	35.1	920	WRG 4280
						20.88	40.5	1050	WRG 4320
						23.0	45.9	1180	WRG 4360
						25.1	51.3	1300	WRG 4400
						27.1	56.7	1430	WRG 4440
						29.1	62.1	1530	WRG 4480
6	M6	5.2	9.5	5.2	3	16.4	22.7	630	WRG 6100
						24.5	37.8	950	WRG 6150
						28.2	45.4	1260	WRG 6200
						35.4	60.5	1570	WRG 6250
						42.1	75.6	1800	WRG 6300
						48.5	90.7	2190	WRG 6350
						51.7	98.3	2490	WRG 6400
						57.8	113	2810	WRG 6450
						63.7	128	3110	WRG 6500
						69.5	143	3420	WRG 6550
						72.3	151	3730	WRG 6600
9	M8	6.8	10.5	6.2	4	62.3	94.8	2710	WRG 9200
						81.1	133	4050	WRG 9300
						107	190	5350	WRG 9400
						123	228	6680	WRG 9500
						147	284	8010	WRG 9600
						162	322	9330	WRG 9700
						184	379	10650	WRG 9800
						198	417	11970	WRG 9900
						219	474	13300	WRG 91000

1N ≒ 0.102kgf

WRGO Type

An example of the composition of model name & number

WRGO6 — 300 [ ] H — 20Z
1 2 3 4 5

1 Model No.
2 Length of race rail
3 No symbol –Standard race rail / E-Special specification of race rail
4 Symbol of precision: No symbol – Normal / H-Precision / P-Super precision
5 Number of rollers

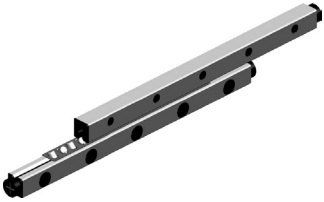

Model No.	Max. stroke	D	No. of rollers Z	Main dimensions					
				L	A	B	C	M x P	N
WRGO 6100	56		7	100				1X50	
WRGO 6150	96		10	150				2X50	
WRGO 6200	136		13	200				3X50	
WRGO 6250	156		17	250				4X50	
WRGO 6300	196		20	300				5X50	
WRGO 6350	216	6	24	350	30	15	14.4	6X50	25
WRGO 6400	256		27	400				7X50	
WRGO 6450	276		31	450				8X50	
WRGO 6500	316		34	500				9X50	
WRGO 6550	336		38	550				10X50	
WRGO 6600	376		41	600				11X50	
WRGO 9200	118		10	200				1X100	
WRGO 9300	178		15	300				2X100	
WRGO 9400	238		20	400				3X100	
WRGO 9500	298		25	500				4X100	
WRGO 9600	359		30	600				5X100	
WRGO 9700	418	9	35	700	40	20	19.2	6X100	50
WRGO 9800	478		40	800				7X100	
WRGO 9900	538		45	900				8X100	
WRGO 91000	598		50	1000				9X100	
WRGO 91100	658		55	1100				10X100	
WRGO 91200	718		60	1200				11X100	

Note (1) 1 SET (Race rail: 4EA, Roller cage: 2EA, Stopper: 8EA)
(2) Basic load rating is based on 1 set.

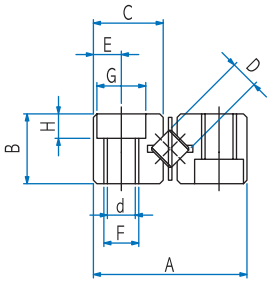

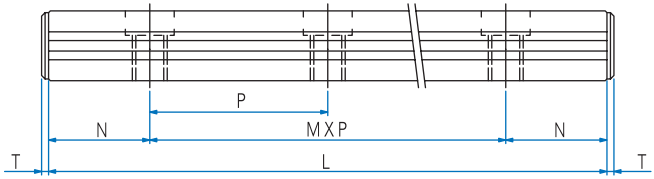

Unit : mm

Dimensions						Basic load rating		Mass (g/set)	Model No.
E	F	d	G	H	T	Dynamic C (kN)	Static Co (kN)		
6	M6	5.2	9.5	5.2	3	16.4	22.7	640	WRGO 6100
						24.5	37.8	940	WRGO 6150
						28.2	45.4	1250	WRGO 6200
						35.4	60.5	1560	WRGO 6250
						42.1	75.6	1860	WRGO 6300
						48.5	90.7	2170	WRGO 6350
						51.7	98.3	2490	WRGO 6400
						57.8	113	2780	WRGO 6450
						63.7	128	3090	WRGO 6500
						69.5	143	3390	WRGO 6550
						72.3	151	3700	WRGO 6600
8	M8	6.8	10.5	6.2	4	62.3	94.8	2280	WRGO 9200
						81.1	133	3400	WRGO 9300
						107	190	4510	WRGO 9400
						123	228	5620	WRGO 9500
						147	284	6740	WRGO 9600
						162	322	7850	WRGO 9700
						184	379	8960	WRGO 9800
						198	417	10070	WRGO 9900
						219	474	11190	WRGO 91000
						232	512	12300	WRGO 91100
						252	569	13410	WRGO 91200

1N ≒ 0.102kgf

WRG-AC Type

An example of the composition of model name & number

WRG3 — 125 AC2 [ ] H — 17Z

1 2 3 4 5 6

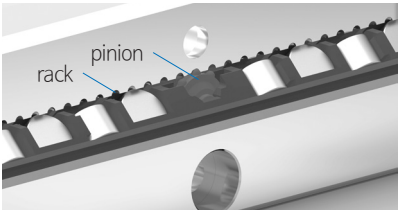

1. Model number
2. Length of race rail
3. AC2-Cage Anti-creep
4. No symbol-Standard race rail / E-Special specification of race rail
5. Symbol of precision : No symbol-Normal / H-Precision / P-Super Precision
6. Number of rollers

Model No.	Max. Stroke	D	no. of rollers Z	Main Dimensions					
				L	A	B	C	M x P	N
WRG 3050 AC2 WRG 3075 AC2 WRG 3100 AC2 WRG 3125 AC2 WRG 3150 AC2 WRG 3175 AC2 WRG 3200 AC2 WRG 3225 AC2	24 55 67 78 90 102 113 144	4	6 8 12 16 20 24 28 30	50 75 100 125 150 175 200 225	18	8	8.6	1x25 2x25 3x25 4x25 5x25 6x25 7x25 8x25	12.5
WRG 6100 AC2 WRG 6150 AC2 WRG 6200 AC2 WRG 6250 AC2 WRG 6300 AC2 WRG 6350 AC2 WRG 6400 AC2 WRG 6450 AC2 WRG 6500 AC2 WRG 6550 AC2	53 78 140 165 190 252 296 321 364 427	8	6 10 12 16 20 22 25 29 32 34	100 150 200 250 300 350 400 450 500 550	31	15	14.7	1 X 50 2 X 50 3 X 50 4 X 50 5 X 50 6 X 50 7 X 50 8 X 50 9 X 50 10 X 50	25

Note. (1) 1Set (Race rail: 4EA, Roller cage:2EA, Stopper:8EA)
(2) Basic load rating is based on 1 set

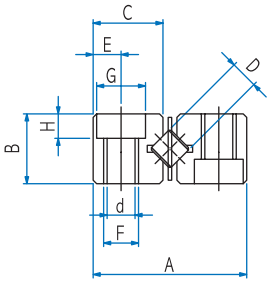

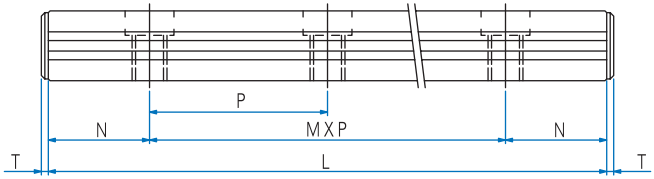

Unit : mm

Main Dimensions						Basic load rating		Mess (g/set)	Model No.
E	F	d	G	H	T	C (kN)	Co (kN)		
3.5	M4	3.3	6	3.1	1.5	6.53 8.20 11.27 14.12 16.81 19.38 21.86 23.06	9.37 12.50 18.75 25.00 31.25 37.50 43.75 46.88	102 151 202 253 304 355 405 455	WRG 3050 AC WRG 3075 AC WRG 3100 AC WRG 3125 AC WRG 3150 AC WRG 3175 AC WRG 3200 AC WRG 3225 AC
6	M6	5.2	9.5	5.2	3	28.91 43.23 49.87 62.46 74.36 80.10 85.73 96.69 107.30 112.49	39.00 65.00 78.01 104.01 130.01 143.01 156.02 182.02 208.02 221.02	606 907 1,204 1,509 1,814 2,110 2,411 2,716 3,016 3,313	WRG 6100 AC2 WRG 6150 AC2 WRG 6200 AC2 WRG 6250 AC2 WRG 6300 AC2 WRG 6350 AC2 WRG 6400 AC2 WRG 6450 AC2 WRG 6500 AC2 WRG 6550 AC2

1N ≒ 0.102kgf

WRGW Type

An example of the composition of model name & number

WRGW2 — 120 [ ] H — 21Z
1 2 3 4 5

1 Model No.
2 Length of race rail
3 No symbol – Standard race rail / E-Special specification of race rail
4 Symbol of precision: No symbol –Normal / H-Precision / P-Super precision
5 Number of rollers

Model No.	Max. stroke	D	No. of rollers Z	Main dimensions						
				L	A	t	B_1	B_2	C	P_1
WRGW 1020	12	1.5	5	20	4.5	0.5	17	7.6	3.8	13.4
WRGW 1030	22		7	30						
WRGW 1040	27		10	40						
WRGW 1050	32		13	50						
WRGW 1060	37		16	60						
WRGW 1070	42		19	70						
WRGW 1080	52		21	80						
WRGW 2030	18	2	5	30	6.5	0.5	24	11	5.5	19
WRGW 2045	24		8	45						
WRGW 2060	30		11	60						
WRGW 2075	44		13	75						
WRGW 2090	50		16	90						
WRGW 2105	64		18	105						
WRGW 2120	70		21	120						
WRGW 3050	28	3	7	50	8.5	0.5	36	16.6	8.3	29
WRGW 3075	48		10	75						
WRGW 3100	58		14	100						
WRGW 3125	78		17	125						
WRGW 3150	88		21	150						
WRGW 3175	108		24	175						
WRGW 3200	118		28	200						
WRGW 4080	58	4	7	80	11.5	0.5	44	20.4	10.2	35
WRGW 4120	82		11	120						
WRGW 4160	106		15	160						
WRGW 4200	130		19	200						
WRGW 4240	154		23	240						
WRGW 4280	178		27	280						

Note (1) 1 SET (Race rail: 4EA, Roller cage: 2EA, Stopper: 8EA)
(2) Basic load rating is based on 1 set.

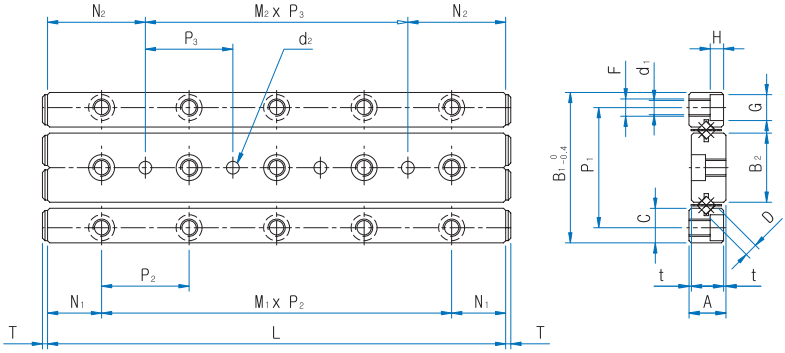

Unit : mm

Dimensions										Basic load rating		Mass (g/set)	Model No.
$M_1 X P_2$	N_1	$M_2 X P_3$	N_2	F	d_1	G	H	T	d_2	Dynamic C (kN)	Static Co (kN)		
1X10		–								0.46	0.61	9	WRGW 1020
2X10		1X10								0.63	0.92	14	WRGW 1030
3X10		2X10								0.95	1.53	18	WRGW 1040
4X10	5	3X10	10	M2	1.65	3	1.4	1.5	2	1.09	1.84	22	WRGW 1050
5X10		4X10								1.37	2.45	26	WRGW 1060
6X10		5X10								1.50	2.75	31	WRGW 1070
7X10		6X10								1.63	3.06	35	WRGW 1080
1X15		–								0.84	1.08	29	WRGW 2030
2X15		1X15								1.46	2.17	43	WRGW 2045
3X15		2X15								1.74	2.71	58	WRGW 2060
4X15	7.5	3X15	15	M3	2.55	4.4	2	2	3	2.01	3.25	72	WRGW 2075
5X15		4X15								2.52	4.34	83	WRGW 2090
6X15		5X15								2.76	4.38	99	WRGW 2105
7X15		6X15								3.00	5.42	113	WRGW 2120
1X25		–								2.71	3.67	101	WRGW 3050
2X25		1X25								4.06	6.11	142	WRGW 3075
3X25		2X25								5.28	8.55	197	WRGW 3100
4X25	12.5	3X25	25	M4	3.3	6	3.1	2.5	4	5.86	9.78	240	WRGW 3125
5X25		4X25								6.98	12.2	292	WRGW 3150
6X25		5X25								8.06	14.7	339	WRGW 3175
7X25		6X25								9.08	17.1	387	WRGW 3200
1X40		–								5.92	8.10	263	WRGW 4080
2X40		1X40								8.85	13.5	401	WRGW 4120
3X40	20	2X40	40	M5	4.3	8	4.2	2.5	5	11.5	18.9	530	WRGW 4160
4X40		3X40								14.0	24.3	660	WRGW 4200
5X40		4X40								16.4	29.7	787	WRGW 4240
6X40		5X40								18.7	35.1	920	WRGW 4280

1N ≒ 0.102kgf

WRGT Series

An example of the composition of model nubmer

WRGT2	065		
1	2	3	4

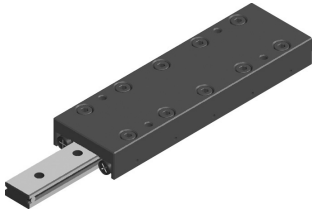

1 Model No.
2 Length of table
3 No symbol – Base tap type
4 No symbol- Standard specification / E-Special processing specification

※ For other sizes and specifications than those in the table of dimensions, please contact us.

Model No.	Main dimensions				Dimensions of the table surface									
	Max. stroke	Width W ±0.1	Height M ±0.1	Length L	Position of table attachment tap					F_1	$n_1 X F_1$	D_1	B_1	G_1
					B	F	n X F	G	S					
WRGT 1025	12			25		18	1 X 18	3.5			1 X 10			
WRGT 1035	18			35		28	1 X 28	3.5			2 X 10			
WRGT 1045	25			45		20	1 X 20	12.5			3 X 10			
WRGT 1055	32	20	8	55	14	30	1 X 30	12.5	M2.6	10	4 X 10	4.1	12.4	7.5
WRGT 1065	40			65		20	2 X 20	12.5			5 X 10			
WRGT 1075	45			75		30	1 X 30	22.5			6 X 10			
WRGT 1085	50			85		30	2 X 30	12.5			7 X 10			
WRGT 2035	18			35		28	1 X 28	3.5			1 X 15			
WRGT 2050	30			50		43	1 X 43	3.5			2 X 15			
WRGT 2065	40			65		30	1 X 30	17.5			3 X 15			
WRGT 2080	50	30	12	80	22	45	1 X 45	17.5	M3	15	4 X 15	6	20	10
WRGT 2095	60			95		30	2 X 30	17.5			5 X 15			
WRGT 2110	70			110		45	1 X 45	32.5			6 X 15			
WRGT 2125	80			125		45	2 X 45	17.5			7 X 15			
WRGT 3055	30			55		40	1 X 40	7.5			1 X 25			
WRGT 3080	45			80		65	1 X 65	7.5			2 X 25			
WRGT 3105	60			105		50	1 X 50	27.5			3 X 25			
WRGT 3130	75	40	16	130	30	75	1 X 75	27.5	M4	25	4 X 25	7.5	28.4	15
WRGT 3155	90			155		50	2 X 50	27.5			5 X 25			
WRGT 3180	105			180		75	1 X 75	52.5			6 X 25			
WRGT 3205	130			205		75	2 X 75	27.5			7 X 25			

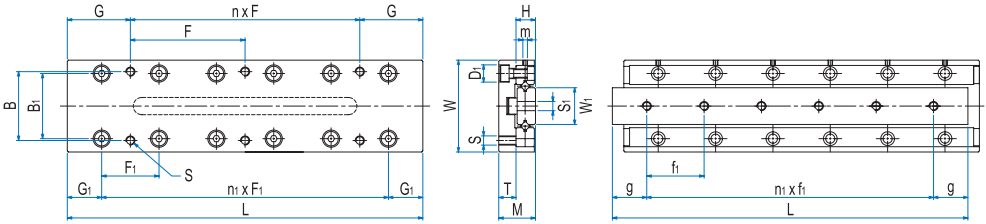

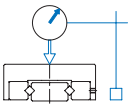

Precision : ⊿C

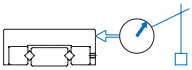

Precision : ⊿D

Unit : μm

Dimensions of the side				Dimensions of the base side position of attachment hole				Basic load rating		Precision μm		Model No.
T	H	W_1	m	S_1	f_1	n_2Xf_1	g	Dynamic C (kN)	Static Co (kN)	⊿C	⊿D	
7.5	4	6.6	M2	M2.6	7.5	2X7.5	5	0.46	0.61	2	4	WRGT 1025
					10.0	2X10	7.5	0.63	0.92	2	4	WRGT 1035
					10.0	3X10	7.5	0.95	1.53	2	5	WRGT 1045
					10.0	4X10	7.5	1.09	1.84	2	5	WRGT 1055
					10.0	5X10	7.5	1.23	2.14	2	5	WRGT 1065
					10.0	6X10	7.5	1.50	2.75	2	5	WRGT 1075
					10.0	7X10	7.5	1.63	3.06	2	5	WRGT 1085
11.5	6	12.0	M2	M3	20.0	1X20	7.5	0.84	1.08	2	4	WRGT 2035
					15.0	2X15	10	1.17	1.63	2	4	WRGT 2050
					15.0	3X15	10	1.46	2.17	2	5	WRGT 2065
					15.0	4X15	10	2.01	3.25	2	5	WRGT 2080
					15.0	5X15	10	2.27	3.79	2	5	WRGT 2095
					15.0	6X15	10	2.52	4.34	2	5	WRGT 2110
					15.0	7X15	10	2.76	4.88	2	5	WRGT 2125
15.5	8	16.0	M2	M4	35.0	1X35	10	2.71	3.67	2	5	WRGT 3055
					25.0	2X25	15	4.06	6.11	2	5	WRGT 3080
					25.0	3X25	15	4.68	7.33	3	6	WRGT 3105
					25.0	4X25	15	5.86	9.78	3	6	WRGT 3130
					25.0	5X25	15	6.98	12.2	3	6	WRGT 3155
					25.0	6X25	15	8.05	14.7	3	6	WRGT 3180
					25.0	7X25	15	8.57	15.9	3	6	WRGT 3205

1N ≒ 0.102kgf

WRGT-B Series

An example of the composition of model nubmer

WRGT2	065	B	
1	2	3	4

1 Model No.
2 Length of table
3 B-Base hole type
4 No symbol-Standard specification / E-Special processing specification

※ For other sizes and specifications than those in the table of dimensions, please contact us.

Model No.	Main dimensions				Dimensions of the table surface									
	Max. stroke	Width W ±0.1	Height M ±0.1	Length L	Position of table attachment tap					F_1	$n_1 X F_1$	D_1	B_1	G_1
					B	F	n X F	G	S					
WRGT 1025B	12			25		18	1 X 18	3.5			1 X 10			
WRGT 1035B	18			35		28	1 X 28	3.5			2 X 10			
WRGT 1045B	25			45		20	1 X 20	12.5			3 X 10			
WRGT 1055B	32	20	8	55	14	30	1 X 30	12.5	M2.6	10	4 X 10	4.1	12.4	7.5
WRGT 1065B	40			65		20	2 X 20	12.5			5 X 10			
WRGT 1075B	45			75		30	1 X 30	22.5			6 X 10			
WRGT 1085B	50			85		30	2 X 30	12.5			7 X 10			
WRGT 2035B	18			35		28	1 X 28	3.5			1 X 15			
WRGT 2050B	30			50		43	1 X 43	3.5			2 X 15			
WRGT 2065B	40			65		30	1 X 30	17.5			3 X 15			
WRGT 2080B	50	30	12	80	22	45	1 X 45	17.5	M3	15	4 X 15	6	20	10
WRGT 2095B	60			95		30	2 X 30	17.5			5 X 15			
WRGT 2110B	70			110		45	1 X 45	32.5			6 X 15			
WRGT 2125B	80			125		45	2 X 45	17.5			7 X 15			
WRGT 3055B	30			55		40	1 X 40	7.5			1 X 25			
WRGT 3080B	45			80		65	1 X 65	7.5			2 X 25			
WRGT 3105B	60			105		50	1 X 50	27.5			3 X 25			
WRGT 3130B	75	40	16	130	30	75	1 X 75	27.5	M4	25	4 X 25	7.5	28.4	15
WRGT 3155B	90			155		50	2 X 50	27.5			5 X 25			
WRGT 3180B	105			180		75	1 X 75	52.5			6 X 25			
WRGT 3205B	130			205		75	2 X 75	27.5			7 X 25			

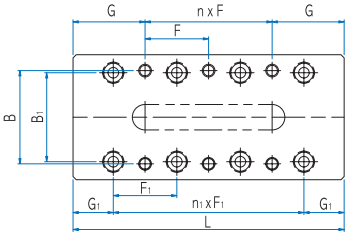

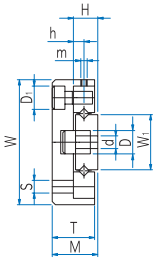

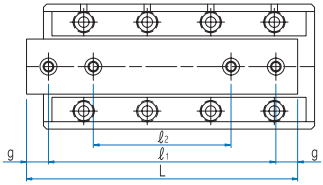

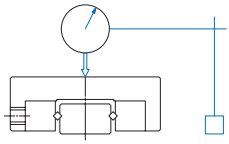

Precision : ⊿C

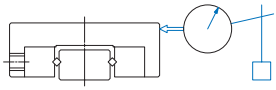

Precision : ⊿D

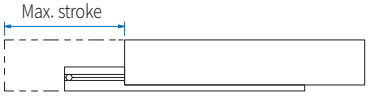

Unit : μm

Dimensions of the side				Dimensions of the base side position of attachment hole				Basic load rating		Precision μm		Model No.
T	H	W1	m	d X D X h	ℓ1	ℓ2	g	Dynamic C (kN)	Static Co (kN)	⊿C	⊿D	
7.5	4	6.6	M2	2.5X4.1X2.2	18	–	3.5	0.46	0.61	2	4	WRGT 1025B
					25	–	5.0	0.63	0.92	2	4	WRGT 1035B
					38	25	3.5	0.95	1.53	2	5	WRGT 1045B
					48	29	3.5	1.09	1.84	2	5	WRGT 1055B
					55	31	5.0	1.23	2.14	2	5	WRGT 1065B
					65	35	5.0	1.50	2.75	2	5	WRGT 1075B
					75	40	5.0	1.63	3.06	2	5	WRGT 1085B
11.5	6	12.0	M2	3.5X6X3.2	25	–	5.0	0.84	1.08	2	4	WRGT 2035B
					35	–	7.5	1.17	1.63	2	4	WRGT 2050B
					55	33	5.0	1.46	2.17	2	5	WRGT 2065B
					70	40	5.0	2.01	3.25	2	5	WRGT 2080B
					85	45	5.0	2.27	3.79	2	5	WRGT 2095B
					95	50	7.5	2.52	4.34	2	5	WRGT 2110B
					110	55	7.5	2.76	4.88	2	5	WRGT 2125B
15.5	8	16.0	M2	4.5X7.5X4.2	40	–	7.5	2.71	3.67	2	5	WRGT 3055B
					68	43	6.0	4.06	6.11	2	5	WRGT 3080B
					90	55	7.5	4.68	7.33	3	6	WRGT 3105B
					115	65	7.5	5.86	9.78	3	6	WRGT 3130B
					140	95	7.5	6.98	12.2	3	6	WRGT 3155B
					165	85	7.5	8.05	14.7	3	6	WRGT 3180B
					190	90	7.5	8.57	15.9	3	6	WRGT 3205B

1N ≒ 0.102kgf

WRGU Series

An example of the composition of model name & number

WRGU3	130	
1	2	3

1 Model No.
2 Length of table
3 No symbol – Standard specificatoin /E-Special processing specification

※ For other sizes and specifications than those in the table of dimensions, please contact us.

Model No.	Main dimensions						Dimensions of the table surface											
							Position of table attachment tap				Side attachment tap position							
	Max. stroke	Width W	Width tolerance	Height M ±0.1	Length L	Mass (kg)	B	nXF	G	S	B_1	n_1XF_1	G_1	G_2	K	b_1	t_1	$S_1X\ell$
WRGU 1025	12				25	0.08		–				1X10		2.5				
WRGU 1035	18				35	0.11		1X10				2X10		4.5				
WRGU 1045	25				45	0.15		2X10				3X10		6				
WRGU 1055	32	30	−0.2 −0.4	17	55	0.18	18.4	3X10	12.5	M2	10	4X10	7.5	7.5	6.5	12	2.5	M2X4
WRGU 1065	40				65	0.21		4X10				5X10		8.5				
WRGU 1075	45				75	0.24		5X10				6X10		11				
WRGU 1085	50				85	0.27		6X10				7X10		13.5				
WRGU 2035	18				35	0.2		–				1X15		3				
WRGU 2050	30				50	0.26		1X15				2X15		4.5				
WRGU 2065	40				65	0.34		2X15				3X15		7				
WRGU 2080	50	40	−0.2 −0.4	21	80	0.42	25	3X15	17.5	M3	15	4X15	10	9.5	7.5	16	3.4	M2X4
WRGU 2095	60				95	0.5		4X15				5X15		12				
WRGU 2110	70				110	0.58		5X15				6X15		14.5				
WRGU 2125	80				125	0.66		6X15				7X15		17				
WRGU 3055	30				55	0.57		–				1X25		5.5				
WRGU 3080	45				80	0.8		1X25				2X25		10.5				
WRGU 3105	60				105	1.03		2X25				3X25		15.5				
WRGU 3130	75	60	±0.1	28	130	1.26	39	3X25	27.5	M4	25	4X25	15	20.5	10	40	5.5	M3X6
WRGU 3155	90				155	1.49		4X25				5X25		25.5				
WRGU 3180	105				180	1.72		5X25				6X25		30.5				
WRGU 3205	130				205	1.95		6X25				7X25		30.5				

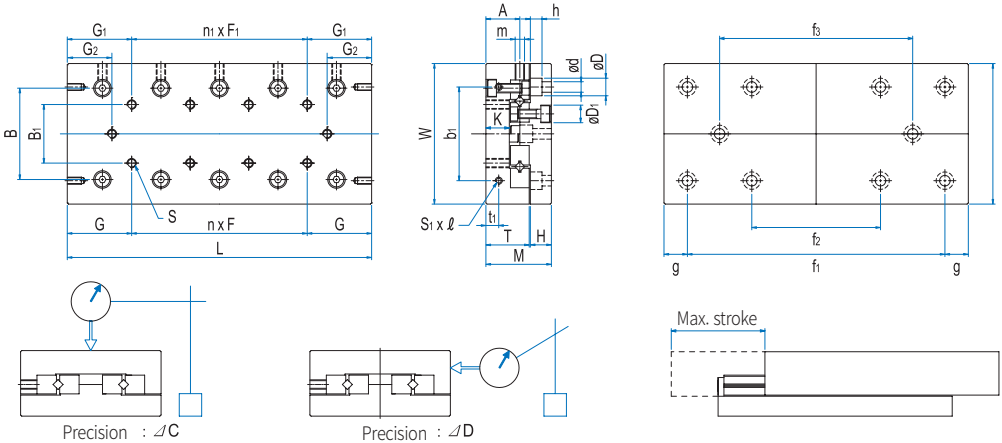

Unit : mm

Dimensions of the side						Dimensions of the base side & position of attachment hole					Basic load rating		Precision mm		Model No.
T	H	d X D X h	D_1	A	m	B_2	f_1	f_2	f_3	g	Dynamic C (kN)	Static Co (kN)	⊿C	⊿D	
11	5.5	2.55X4.1X2.5	4.1	9	M2	22	18	-	-	3.5	0.46	0.61	2	4	WRGU 1025
							28	-	-		0.63	0.92	2	4	WRGU 1035
							38	-	-		0.95	1.53	2	4	WRGU 1045
							48	28	-		1.09	1.84	2	5	WRGU 1055
							58	38	-		1.23	2.14	2	5	WRGU 1065
							68	48	-		1.50	2.75	2	5	WRGU 1075
							78	58	-		1.63	3.06	2	5	WRGU 1085
14	6.5	3.5X6X3.5	6.0	11	M3	30	25	-	-	5	0.84	1.08	2	4	WRGU 2035
							40	-	-		1.17	1.63	2	4	WRGU 2050
							55	-	-		1.46	2.17	2	5	WRGU 2065
							70	40	-		2.01	3.25	2	5	WRGU 2080
							85	55	-		2.27	3.79	2	5	WRGU 2095
							100	70	-		2.52	4.34	3	6	WRGU 2110
							115	85	-		2.76	4.88	4	6	WRGU 2125
18.5	9	4.5X7.5X5	7.5	14.5	M4	40	35	-	-	10	2.71	3.67	2	5	WRGU 3055
							60	-	-		4.06	6.11	2	5	WRGU 3080
							85	-	-		4.68	7.33	3	6	WRGU 3105
							110	-	-		5.86	9.78	3	6	WRGU 3130
							135	-	85		6.98	12.2	3	6	WRGU 3155
							160	-	110		8.05	14.7	3	7	WRGU 3180
							185	85	135		8.57	15.9	3	7	WRGU 3205

1N ≒ 0.102kgf

WRGU Series

An example of the composition of model name & number

WRGU4	125	
1	2	3

1 Model No.
2 Length of table
3 No symbol – Standard specificatoin /E-Special processing specification

※ For other sizes and specifications than those in the table of dimensions, please contact us.

Model No.	Main dimensions					Dimensions of the table surface												
						Position of table attachment tap				Side attachment tap position								
	Max. stroke	Width W	Height M ±0.1	Length L	Mass (kg)	B	n X F	G	S	B_1	n_1XF_1	G_1	G_2	b_1	b_2	t_1	t_2	S_1 X ℓ
WRGU 4085	50	80	35	85	1.5	53	-	42.5	M5	40	1X40	22.5	10.5	55	–	6.5	–	M3X6
WRGU 4125	75			125	2.3		1X40				2X40		18.0					
WRGU 4165	105			165	3.1		2X40				3X40		23.0					
WRGU 4205	135			205	3.8		3X40				4X40		30.5					
WRGU 4245	155			245	4.6		4X40				5X40		38					
WRGU 4285	185			285	5.3		5X40				6X40		43.0					
WRGU 6110	60	100	45	110	3.2	63	-	55	M6	50	1X50	30.0	16.0	60	92	8	15	M4X8
WRGU 6160	95			160	4.6		1X50				2X50		23.5					
WRGU 6210	130			210	6.0		2X50				3X50		31.0					
WRGU 6260	165			260	7.4		3X50				4X50		38.5					
WRGU 6310	200			310	8.7		4X50				5X50		46.0					
WRGU 6360	235			360	10.1		5X50				6X50		53.5					
WRGU 6410	265			410	11.5		6X50				7X50		63.5					
WRGU 9210	130	145	60	210	12.0	96	-	105	M8	85	1X100	55.0	27.0	90	135	11	20	M4X8
WRGU 9310	180			310	17.6		1X100				2X100		52.0					
WRGU 9410	350			410	23.2		2X100				3X100		17.0					
WRGU 9510	450			510	28.8		3X100				4X100		17.0					
WRGU 9610	550			610	34.4		4X100				5X100		17.0					
WRGU 9710	650			710	40.0		5X100				6X1007X		17.0					
WRGU 9810	750			810	45.6		6X100				100		17.0					
WRGU 9910	850			910	51.2		7X100				8X100		17.0					
WRGU 91010	950			1010	56.8		8X100				9X100		17.0					

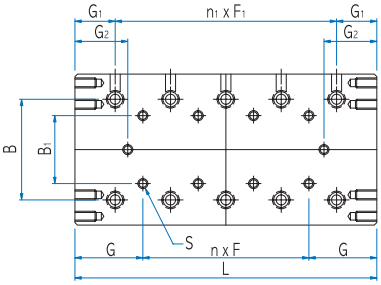

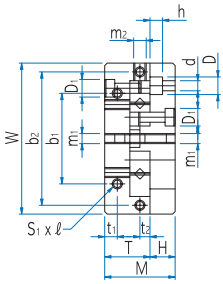

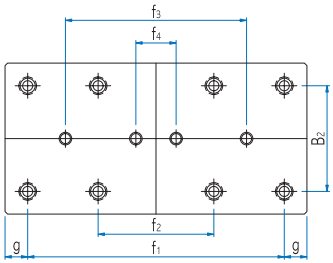

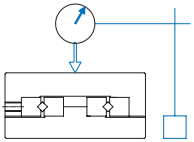

Precision : ⊿C

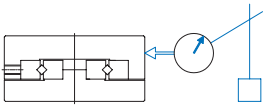

Precision : ⊿D

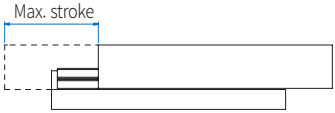

Unit : mm

Dimensions of the side						Dimensions of the base side & position of attachment hole						Basic load rating		Precision mm		Model No.
T	H	d X D X h	D_1	m_1	m_2	B_2	f_1	f_2	f_3	f_4	g	Dynamic C (kN)	Static Co (kN)	⊿C	⊿D	
24	10.5	5.5X9.5X6	9.5	M4	M4	60	65	–	–	–	10	5.92	8.10	2	5	WRGU 4085
							80	–	–	–	22.5	8.85	13.5	2	6	WRGU 4125
							120	–	–	–	22.5	11.5	18.9	2	7	WRGU 4165
							160	80	–	–	22.5	14.0	24.3	2	7	WRGU 4205
							200	120	–	–	22.5	16.4	29.7	2	7	WRGU 4245
							240	160	–	–	22.5	18.7	35.1	2	7	WRGU 4285
31	13	7X11X7	11	M5	M5	60	90	–	–	–	10	16.4	22.7	2	6	WRGU 6110
							140	–	–	–	10	20.5	30.2	2	6	WRGU 6160
							190	–	90	–	10	28.2	45.4	2	7	WRGU 6210
							240	–	140	–	10	35.4	60.5	2	7	WRGU 6260
							290	–	190	–	10	38.8	68.0	2	8	WRGU 6310
							340	140	240	–	10	45.4	83.2	3	8	WRGU 6360
							390	190	290	–	10	51.7	98.3	4	8	WRGU 6410
43	16	9X14X9	14	M8	M6	90	100	–	–	–	55	52.3	75.8	3	7	WRGU 9210
							200	–	–	–	55	81.1	133	3	7	WRGU 9310
							300	–	100	–	55	81.1	133	4	8	WRGU 9410
							400	–	200	–	55	98.7	171	4	8	WRGU 9510
							500	100	300	–	55	115	209	4	9	WRGU 9610
							600	200	400	–	55	131	246	4	9	WRGU 9710
							700	300	500	100	55	139	265	5	10	WRGU 9810
							800	400	600	200	55	155	303	5	10	WRGU 9910
							900	500	700	300	55	169	341	5	10	WRGU 91010

1N ≒ 0.102kgf

WRGU-AC Series

An example of the composition of model name & number

WRGU3	130	AC2	
1	2	3	4

1 Model No
2 Length of table
3 AC2-Cage anti-creep type
4 No symbol-Standard specification /E-Special processing specification

※ For other sizes and specifications than those in the table of dimensions, please contact us.

Model No.	Main dimensions						Dimensions of the table surface												
	Max. stroke	Width W	Width tolerance	Height M ±0.1	Length L	Mass (kg)	Position of table attachment tap				Side attachment tap position								
							B	nXF	G	S	B1	n1XF1	G1	G2	b1	b2	t1	t2	S1Xℓ
WRGU 3055 AC2	24	60	±0.1	28	55	0.57	39	-	27.5	M4	25	1X25	6	3.1	6	3.1	6	3.1	6
WRGU 3080 AC2	55				80	0.80		1X25				2X25							
WRGU 3105 AC2	67				105	1.03		2X25				3X25							
WRGU 3130 AC2	78				130	1.26		3X25				4X25							
WRGU 3155 AC2	90				155	1.49		4X25				5X25							
WRGU 3180 AC2	102				180	1.72		5X25				6X25							
WRGU 3205 AC2	113				205	1.95		6X25				7X25							
WRGU 6110 AC2	53	100	±0.1	45	110	3.2	63	-	55	M6	50	1X50	9.5	5.2	9.5	5.2	9.5	5.2	9.5
WRGU 6160 AC2	78				160	4.6		1X50				2X50							
WRGU 6210 AC2	140				210	6.0		2X50				3X50							
WRGU 6260 AC2	165				260	7.4		3X50				4X50							
WRGU 6310 AC2	190				310	8.7		4X50				5X50							
WRGU 6360 AC2	252				360	10.1		5X50				6X50							
WRGU 6410 AC2	296				410	11.5		6X50				7X50							

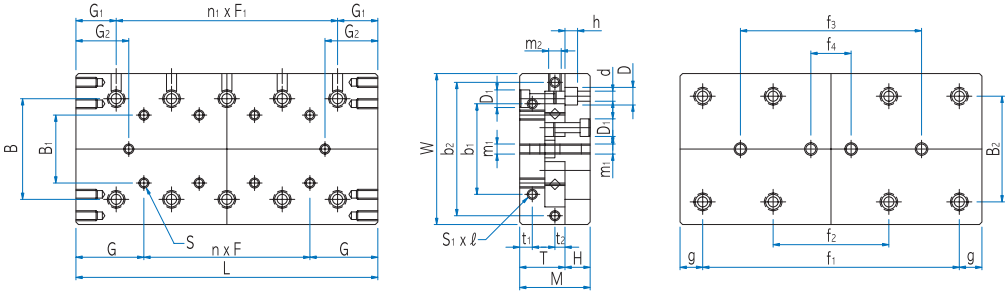

Precision : ⊿C

Precision : ⊿D

Unit : mm

Dimensions of the side						Dimensions of the base side & position of attachment hole					Basic load rating		Precision mm		Model No.
T	H	dXDXh	D1	m1	m2	B2	f1	f2	f3	g	Dynamic C (kN)	Static Co (kN)	C	D	
18.5	9	4.5X7.5X5	7.5	14.5	M4	40	35	-	-	10	6.53	9.37	2	5	WRGU 3055 AC2
							60	-	-		8.20	12.50	2	5	WRGU 3080 AC2
							85	-	-		11.27	18.75	3	6	WRGU 3105 AC2
							110	-	-		14.12	25.00	3	6	WRGU 3130 AC2
							135	-	85		16.81	31.25	3	6	WRGU 3155 AC2
							160	-	110		19.38	37.50	3	7	WRGU 3180 AC2
							185	85	135		21.86	43.75	3	7	WRGU 3205 AC2
31	13	7X11X7	11	M5	M5	60	90	-	-	60	28.9	39.0	2	6	WRGU 6110 AC2
							140	-	-		43.2	65.0	2	6	WRGU 6160 AC2
							190	-	90		49.9	78.0	2	7	WRGU 6210 AC2
							240	-	140		62.5	104.0	2	7	WRGU 6260 AC2
							290	-	190		74.4	130.0	2	8	WRGU 6310 AC2
							340	140	240		80.1	143.0	3	8	WRGU 6360 AC2
							390	190	290		85.7	156.0	4	8	WRGU 6410 AC2

1N ≒ 0.102kgf

WON

LINEAR MOTION SYSTEM

Curved Cross Roller Guide Way

Contents

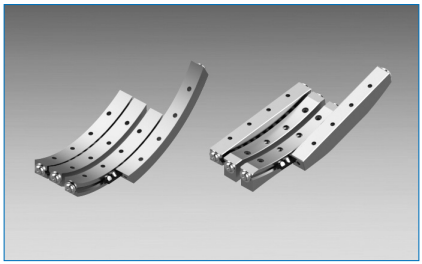

1 1. Structure and Features of Curved Cross-Roller Guideway

The curved cross-roller guideway of WON is a non-cyclic, curved motion bearing with low friction. Use high-precision optical measuring equipment to change the slope without changing the center of rotation or when an accurate slope is required.

The WON Curved Cross-Roller Guideway CRG type consists of a curved track bed with a V-groove of precisely grinding curves and a curved roller cage. The WON Curved Cross-Roller Guide CRGF type is a precisely ground V groove with a curved surface, flat installation surface, and a curved roller cage. Since the motor does not circulate, there is almost no change in the friction resistance, and very low friction resistance allows for a curved motion.

1) Low friction resistance and fine motion

V grooves are precisely ground and the friction resistance is very low, using a precision roller. There is only slight variation in static and dynamic friction resistance, enabling fine and accurate curved motion.

2) Low noise

There is no noise as the rolling element does not circulate. In addition, the curved roller cage supports the rollers at regular intervals, providing smooth driving without any sound of contact between the rollers

3) High load capacity

Precision rollers are used as a rolling element, which is more rigid and has a considerable load capacity than the ball.

4) Convenient installation

The CRGF-type installation surface is flat, so there is no need for complicated machining of the table and base during installation. As a result, processing costs can be significantly reduced.

5) Equal center of rotation

The V groove is precisely ground and has an accurate center of rotation.

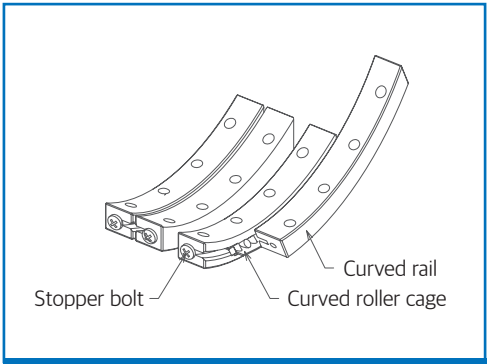

Figure 1. CRG-Type Structure

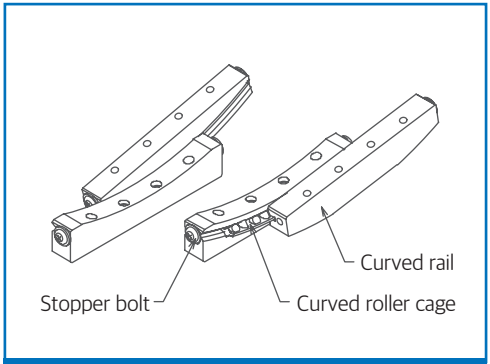

Figure 2. CRGF-Type Structure

2 Precision

1) Precision of CRG type

Table 1. Precision Unit: mm

Model Number	Precision
CRG2050- 61	10
CRG2050- 78	
CRG2050- 96	
CRG2050- 50	
CRG2050- 68	
CRG2060- 60	
CRG3070- 70	
CRG3070- 87	
CRG3070- 90	
CRG3070- 96	
CRG3070-110	
CRG3070-122	
CRG3070-136	
CRG3100-160	

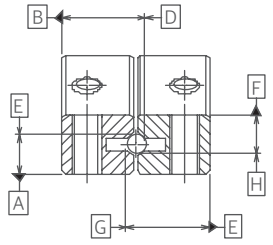

Figure 3. CRG-Type Precision

2) Precision of CRGF type

Table 2. Precision Unit: mm

Model Number	Difference between A and B / Difference between C and D	Difference between E and F / Difference between H and I
CRGF2050-87	10	10
CRGF3070-110		

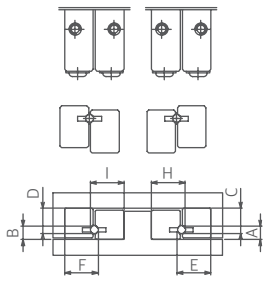

Figure 4. CRGF-Type Precision

3 Life Calculation

You can obtain the rated operating life of the curved cross roller guideway using the following equation.

$$L = \frac{90}{\theta} \times \left(\frac{f_T}{f_w} \times \frac{C}{P}\right)^{\frac{10}{3}} \times 10^6$$

Operating lifetime

$$L_h = \frac{L \times 10^6}{60 \times n}$$

L : Rated operating life
θ : Rotating angle (°)
C : Basic dynamic rating load (N)
P : Applied load (N)
f_T : Temperature coefficient
f_W : Load coefficient
L_h : Operating life time(h)
n : Number of revolutions per minute

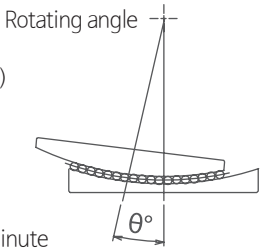

4 Installation

1) Precision of mounting surface

The precision of mounting surfaces 1, 2, 3, and 4 directly affects the precision of curved motion (Figure 5). To optimize the performance of the WON curved cross roller guideway, the installation surface must be machined precisely.

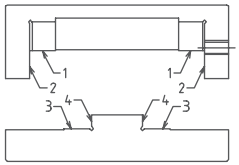

Figure 5. Accuracy of Mounting Surface

2) Installation method

1) Remove debris from the mounting surface of the table and bed.

2) Apply low viscosity oil to the V groove. Tighten the bolts with regulated torque by keeping track 1, 2 and 3 of Figure 6a in close contact with the mounting surface. (Table 3)

3) Secure the gap to push the roller cage into the side by temporarily fastening track 4 in Figure 6a.

4) Remove the stopper on one side of the rail and in sert the roller cage as shown in Figure 6c.

5) Reseat the stopper.

6) Center the roller cage by moving the table left and right (in the direction of the stroke).

7) Install the dial gauge on the side of the table in the reference plane. (Figure 6d)

8) Move the table to one end of the stroke and tighten the adjustment bolt slightly. (Figure 6e) Adjustment bolts outside the roller cage should not be tightened in this case.

9) Move the table to the opposite end of the stroke and tighten the adjustment bolt slightly. (Figure 6f) Adjustment bolts outside the roller cage should not be tightened in this case.

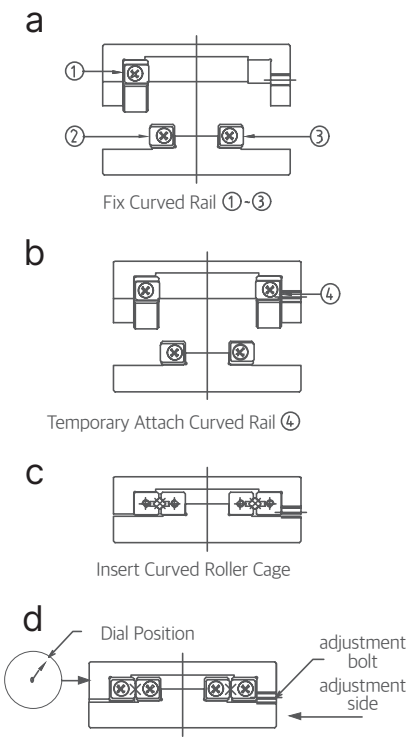

Figure 6. Installation Method

10) Move the table to the center and tighten the ad justment bolt slightly. (Figure 6g)

11) Repeat steps 8) through 10) until there is no space between the table and the roller cage. Be careful not to apply excessive pre-load

12) Tighten the adjustment bolts evenly with a torque wrench.

13) Fastening bolts on track 4 in the same way as 8) through 10) Adjustment bolt tightening while mov ing the table.

Figure 5. Accuracy of Mounting Surface Unit : N·m

Size	Clamping torque
M2.5	0.5
M3	1.1

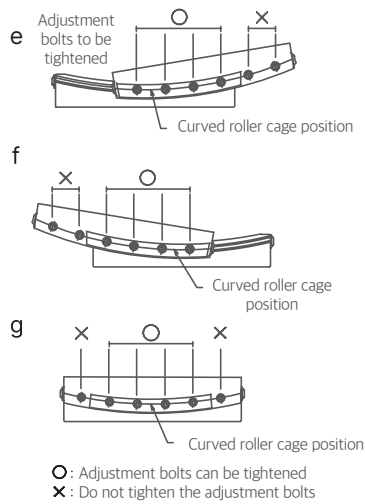

Figure 6. Installation Method

3) Design of Installation Surface

The curved cross-roller guideway is fitted with the reference plane of the track band in contact with the corner of the mounting surface. The corners shall be relaxed as shown in Figure 7 to avoid interfering with the reference corners of the track. Alternatively, the corners shall be rounded as shown in Figure 8 and within the prescribed radial dimensions of Table 4.

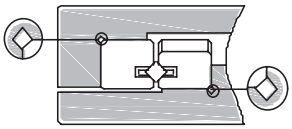

Figure 7. Corner Machining

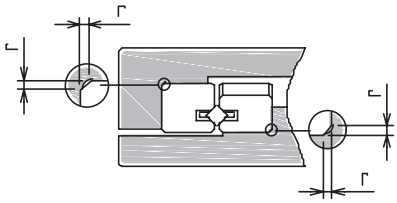

Figure 8. Corner Round

Table 4. Edge Radius Maximum Unit: mm

Size	r
CRG2 CRGF2	0.05
CRG3 CRGF3	0.1

5 Precautions for use

1) Lubrication

V grooves are precisely ground and the friction resistance is very low, using a precision roller. There is only slight variation in static and dynamic friction resistance, enabling fine and accurate curved motion.

2) Dust protection

If foreign substances enter the WON curved cross roller guideway, they may affect precision and life expectancy and should be protected by a cover in poor conditions

3) Driving Environment

The recommended operating temperature of the WON curved cross roller guideway is -20℃ to 80℃.

4) Mediation

Improper installation surfaces or poor pre-load adjustment can result in reduced precision and reduced lifespan.

5) Roller Cage Slip

For WON curved cross roller guides, roller cages may slip under high speed motion, vertical use, load imbalance, and vibration conditions. It is recommended that you set the rotation range with sufficient margin and avoid excessive pre-load. It is also recommended that the roller cage returns to the center by moving the table several times to the maximum stroke at regular intervals

6) Stopper

Stoppers are installed at both ends of the track, but only for preventing separation of the roller cage and the stopper of the table must be installed separately outside.

7) Handle with care

Dropping the WON curve cross roller guideway may damage the V groove orbital surface of the rolling element. This can lead to poor precision as smooth exercise is not possible. Please handle the product carefully.

8) Use the same set

Since the four tracks are precisely combined in one set, combining them with other sets of track can result in reduced precision

9) Allowable Load

If smooth and high precision is required, be sure to use it within the allowable load.

CRG Type

An example of the composition of model name & number

CRG2 (1) 050 (2) — 50 (3) — 9Z (4)

1 Model No
2 Length of race rail
3 Radius from rotation center
4 Number of rollers

Model No.	Rotaion range	Roller diameter D mm	Number of rollers Z	Major dimensions L mm	R mm	R1 mm	R2 mm	A mm
CRG2050- 61	±3°	2	12	50	61	64	58	12
CRG2050- 78	±5°		10	50	78	81	75	12
CRG2050- 96	±4°		10	50	96	99	93	12
CRG2050- 50	±15°		9	50	50	53	47	15
CRG2050- 68	±11°		9	50	68	71	65	15
CRG2060- 60	±10°		12	60	60	63	57	15
CRG3070- 70	±7°	3	12	70	70	74	66	18
CRG3070- 87	±7°		12	70	87	91	83	18
CRG3070- 90	±7°		11	70	90	94	86	18
CRG3070- 96	±4°		12	70	96	100	92	18
CRG3070-110	±10°		10	70	110	114	106	18
CRG3070-122	±5°		11	70	122	126	118	18
CRG3070-136	±4°		9	70	136	140	132	18
CRG3100-160	±10°		14	100	160	164	156	18

1N ≒ 0.102kgf

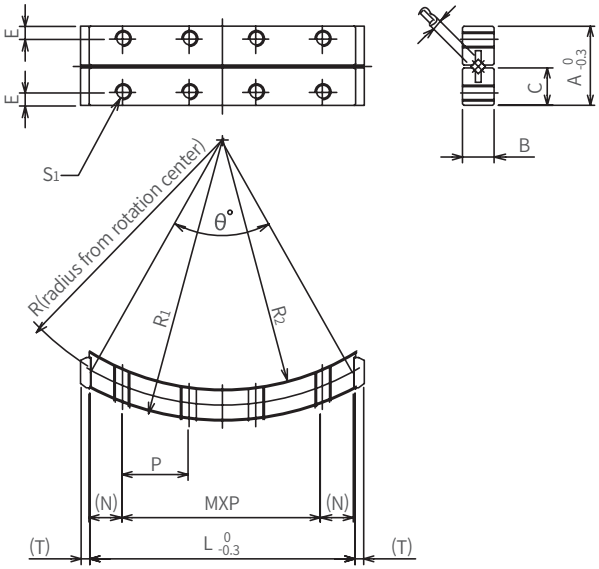

Major dimensions								Basic load rating		Allow -able	Mass (g/set)	Model No.
B mm	C mm	MxP mm	N mm	E mm	S1	T mm	θ	Dynamic C (N)	Static C_0 (N)	F (N)		
6	5.5	3 x 10	10	3	M2.5	1.5	48.3˚	1,450	2,820	940	51	CRG2050- 61
6	5.5	3 x 10	10	3	M2.5	1.5	37.3˚	1,360	2,420	810	51	CRG2050- 78
6	5.5	3 x 10	10	3	M2.5	1.5	30.1˚	1,050	2,440	810	51	CRG2050- 96
6	7.25	3 x 12.5	6.25	2.5	M3	1.5	58.6˚	1,030	1,910	640	63	CRG2050- 50
6	7.25	3 x 12.5	6.25	2.5	M3	1.5	42.2˚	960	1,910	640	63	CRG2050- 68
6	7.25	3 x 12.5	11.25	2.5	M3	1.5	60˚	1,450	2,810	940	75	CRG2060- 60
8	8.5	3 x 15	12.5	3	M3	1.8	59˚	3,160	6,380	2,130	142	CRG3070- 70
8	8.5	3 x 15	12.5	3	M3	1.8	46.7˚	3,060	6,570	2,190	142	CRG3070- 87
8	8.5	3 x 15	12.5	3	M3	1.8	45˚	2,570	5,570	1,860	141	CRG3070- 90
8	8.5	3 x 15	12.5	3	M3	1.8	42.1˚	2,540	6,680	2,230	141	CRG3070- 96
8	8.5	3 x 15	12.5	3	M3	1.8	36.5˚	2,440	5,620	1,870	141	CRG3070-110
8	8.5	3 x 15	12.5	3	M3	1.8	32.8˚	2,320	5,640	1,880	137	CRG3070-122
8	8.5	3 x 15	12.5	3	M3	1.8	29.3˚	1,780	4,520	1,510	137	CRG3070-136
8	8.5	5 x 15	12.5	3	M3	1.8	36.4˚	2,920	7,930	2,640	203	CRG3100-160

1N ≒ 0.102kgf

CRGF Type

An example of the composition of model name & num

CRGF2 (1) 050 (2) — 50 (3) — 9Z (4)

1 Model No
2 Length of race rail
3 Radius from rotation center
4 Number of rollers

Model No.	Rotaion range	Roller diameter D mm	Number of rollers Z	Major dimensions							
				L mm	R mm	R_1 mm	R_2 mm	H_1 mm	H_2 mm	h_1 mm	h_2 mm
CRGF2050- 87	±6°	2	10	50	87	84	89.5	89.5	81.5	7.5	7.5
CRGF3070-110	±10°	3	10	70	70	106	114	114.5	100.5	12.8	12.5

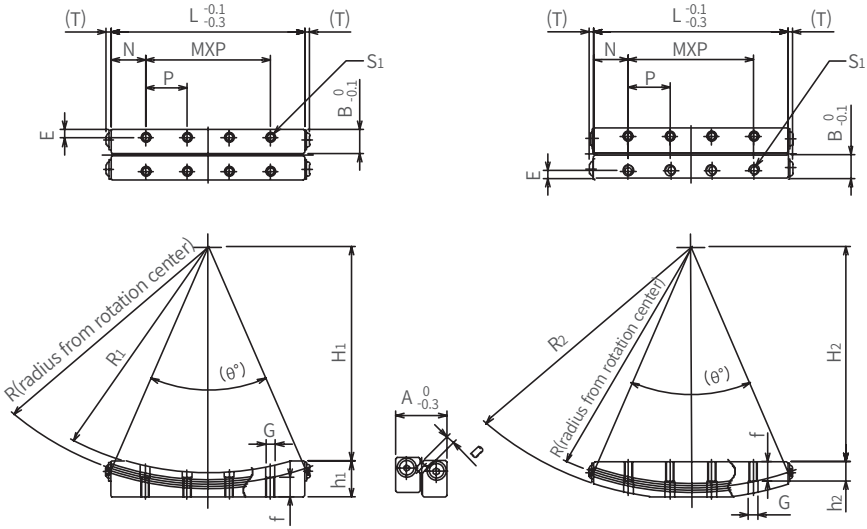

Major dimensions										Basic load rating		Allow -able	Mass (g/set)	Model No.
A mm	B mm	MxP	N mm	E mm	S_1 mm	f mm	G mm	T mm	θ	Dynamic C (N)	Static C_0 (N)	F (N)		
15	7.25	3 x 12.5	6.25	2.5	M2.5	4	3	2	33.3˚	1,130	2,420	810	67	CRGF2050- 87
18	8.5	3 x 15	12.5	3	M3	7	3.5	1.7	37.1˚	2,440	5,620	1,870	189	CRGF3070-110

1N ≒ 0.102kgf

WON

LINEAR MOTION SYSTEM

Super Ball Bushing
Contents

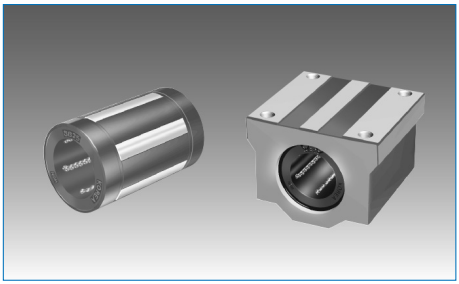

1 Features of Super Ball Bushing

WON ST localized super ball bushing for the first time in Korea. WON Super Ball Bushing with heavy load & self-aligning type has significant features as follows.

1. 27 times longer service life (3 times more load capacity)

WON Super Ball Bushing has about 3 times more dynamic load rating capacity than a general ball bushing with the same specifications. Therefore, its travel life is 27 times longer.

- The plate of a super ball bushing is made of the special steel with heat treatment. The precisely polished raceway of a ball is designed to be a fewer larger than diameter of the ball in order to be suitable for rolling motion of the ball and high load.
- The 0.5° self-aligning function helps to make even distribution of ball load and to prevent partial intensive pressure that causes a shortened service life.

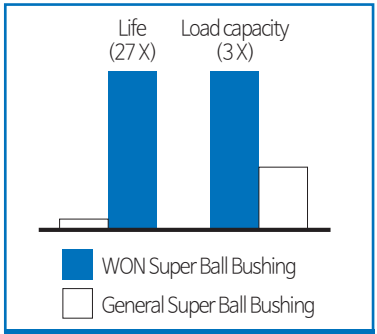

Table 1. Comparison of life and load capacity

2. 0.5°Self-aligning

The outer side of the plate of WON Super Ball Bushing is curved so as to have 0.5 ° self-aligning function in the direction of shaft length. This function helps to absorb the increased pressure between the corner of a ball bushing and a shaft, which is caused by inconsistence between the center lines of the ball bushing and the shaft, and thereby to distribute evenly load on each ball. In addition, it helps to make a ball easily come in and out of the load-carrying area and thus supports smooth running.
(It is recommended to design a system composed of two shafts, each of which has two ball bushings.)

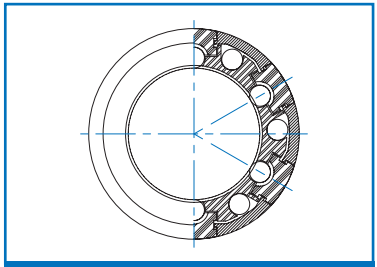
Figure 1. Cross section of super ball bushing

3. Compatibility

WON Super Ball Bushing is classified into Asia Series (SB) and Europe Series (SBE). SB Series has compatibility, since its installation dimensions are equal to those of general ball bushing products used domestically.

4. Fast speed and acceleration

A super ball bushing supports 3m/sec of velocity and 150m/sec^2 of acceleration without shortening its service life.

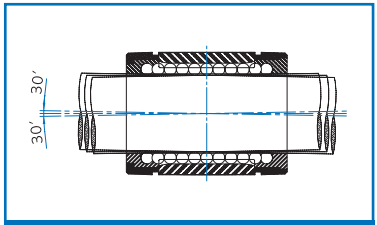

Figure 2. 0.5° self-aligning

5. Easy adjustment of gap

When the bearing plate in the radial direction is installed in the housing making it possible to adjust clearance, it is easy to adjust a gap in the radial direction in order for precise travel without runout.

- Zero gap adjustment
  After WON Super Ball Bushing is installed in the housing supporting clearance adjustment, insert a shaft. Adjust the gap with an adjustment screw until you feel a tiny resistance at the time of turning the shaft.
- Preload
  To apply preload, set a shaft, which is smaller as many as a preload level (μ) than the shaft (diameter: d) to be used, to zero gap.

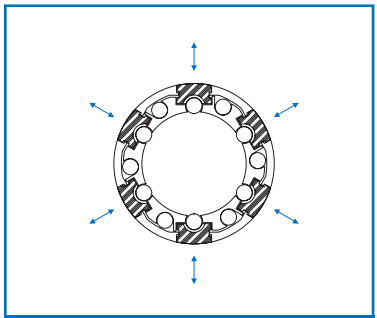

Figure 3. Gap adjustment

6. Reduction in installation cost

The self-aligning function of a super ball bushing helps to absorb inaccurate processing or inaccuracy of installation and thus to drive smoothly. Therefore, it saves installation time and cost.

7. Smooth driving

The self-aligning function makes it easy for a ball to enter in the load-carrying area. Since the outer sleeve and retainer are made of light and anti-wear polyamide, it supports smooth driving with low inertial force and noise. In the condition of oil lubrication without any seal, the maximum coefficient of friction is 0.001.

8. Available temperature

If a super ball bushing is used at above 100˚C, it shortens its service life.
(Figure 6. See the temperature factor in the calculation of life.)

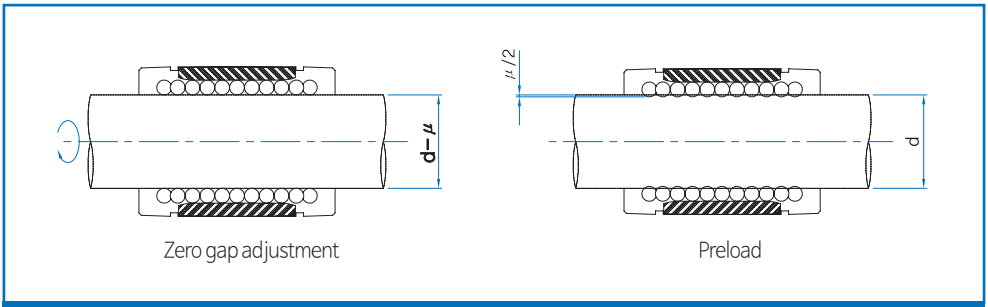

Figure 4. Zero gap and preload

2 Types of Super Ball Bushing

1. Asia Series

SB Bearing

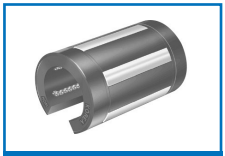

SBO Bearing

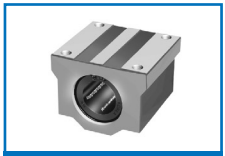

SH Block

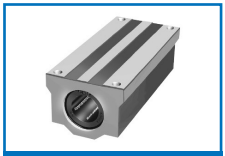

SHW Block

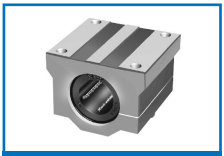

SH-A Block

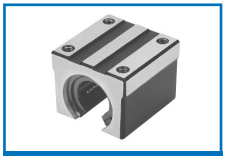

SHO Block

2. Europe Series


SBE Bearing

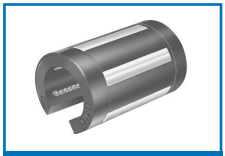
SBEO Bearing


CS Block


CS-A Block


CSW Block


CSW-A Block


CSO Block


CSO-A Block


CSOW Block


CSOW-A Block

3. Inch Series

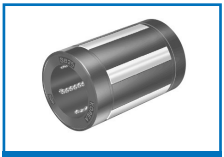
SBA Bearing


SBAO Bearing

3 Life of Super Ball Bushing

A linear motion system has rolling linear motion by bearing load. For this reason, the raceway surface and a rolling element of the system have repetitive stress all the times. Accordingly, if the system reaches a certain travel distance, its raceway or rolling element surface faces a fatigue crack and a scale-like shape appears on part of the surface. Such a phenomenon is called flaking.
Life of a linear motion system refers to a total travel distance until the initial flaking arises on the raceway surface or a rolling element.

1. Basic dynamic load rating (C)

Basic dynamic load rating refers to the load with a constant direction and size, which makes it possible for 90% in one group of linear motion systems to run 50km without any material damage caused by fatigue when each one of the systems runs under the same condition. A value of basic dynamic load rating is described in the table of dimensions.

2. Hardness factor (f_H)

If a ball bushing has a low hardness factor of shaft, its life is shortened.

$$L = \left(\frac{C}{P} \cdot f_H \cdot f_T \cdot f_D\right)^3 \cdot 50 \text{(km)}$$

L	: Running distance life	(km)
C	: Basic dynamic load rating	(N)
T	: Basic dynamic rated torque	(N · m)
P	: Applied load	(N)
f_H	: Hardness factor	(See Figure 5.)
f_T	:Temperature facto	(See Figure 6.)
f_D	: Load direction factor	(See Figure 8.)

$$L_h = \frac{L \cdot 10^3}{2 \times \ell_s \times n_1 \times 60} \text{(hr)}$$

L_h	: Rating life	(hr)
L	: Running distance life	(km)
ℓ_s	: Stroke length	(m)
n_1	: Number of strokes per minute	(o.p.m)

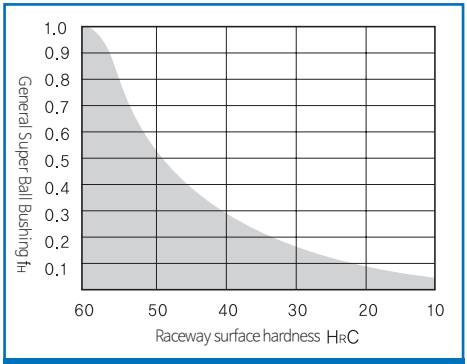

Figure 5. Hardness factor

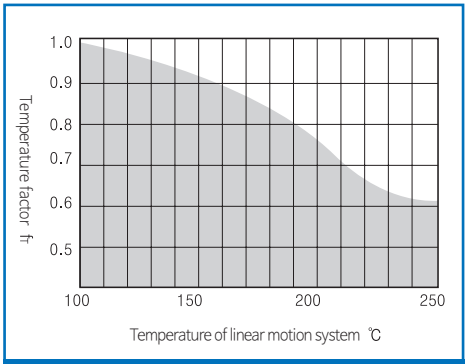

Figure 6. Temperature factor

3. Temperature factor (f_T)

If a super ball bushing is used at above 100 °C, it shortens its service life. (Figure 6.)

4. Load direction factor (f_D)

The values of the basic load rating C and Co, shown in the table of dimensions, mean the values when the load direction is the 'min' position (Figure 7). The values of C and Co are changed differently depending on a load direction, as shown in Figure 8.

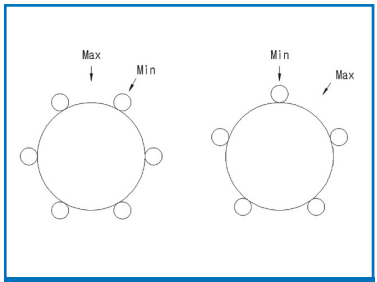

Figure 7. Load direction and load capacity

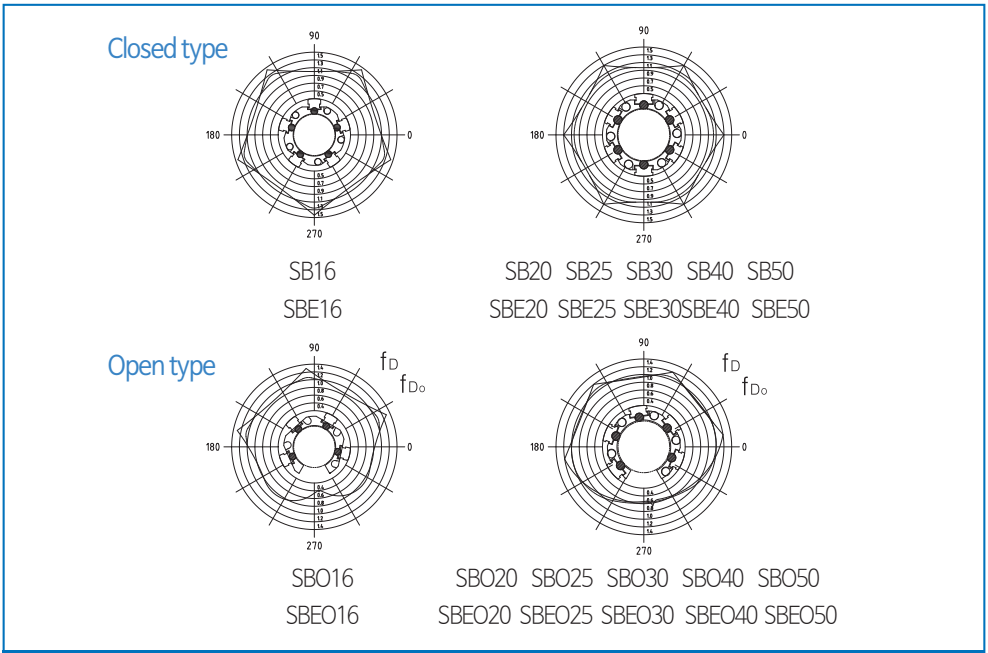

Figure 8. Load direction and factor

5. Basic static load rating (Co)

Basic static load rating refers to the load with a constant direction and size in the condition where the total permanent deformation of the rolling element and raceway surface is 0.0001 times more than diameter of a ball as elasticity of the contact part with maximum stress is out of its limit. If inertial force exceeds basic static load rating in the condition of vibration, impacts, or fast velocity, a super ball bushing fails to have smooth linear motion and shortens its service life greatly. Be careful.

6. Housing and shaft tolerance

To use WON Super Ball Bushing, it is necessary to prepare a housing. The tolerance of inside dimeter of the housing affects precision and life of the device. For the housing and shaft tolerance of WON Super Ball Bushing, see Tables 2 to 7.

- Housing tolerance

Table 2. Asia Series

Unit : mm

Model No.	SB 16	SB 20	SB 25	SB 30	SB 40
Inside diameter (D)	28	32	40	45	60
Tolerance(H7)	+0.021 0	+0.025 0			+0.030 0

Table 3. Europe Series

Unit : mm

Model No.	SBE 16	SBE 20	SBE 25	SBE 30	SBE 40	SBE 50
Inside diameter (D)	26	32	40	47	62	75
Tolerance(H7)	+0.021 0	+0.025 0			+0.030 0	

Table 4. Inch Series

Unit : inch

Model No.	SBA 4	SBA 6	SBA 8	SBA 10	SBA 12	SBA 16	SBA 20	SBA24
Inside diameter (D)	0.5	0.625	0.875	1.125	1.25	1.5625	2	2.375
Tolerance(H7)	+0.0007 0		+0.0008 0		+0.0010 0		+0.0012 0	

- Shaft Tolerance

Table 5. Asia Series

Unit : mm

Model No.	SB 16	SB 20	SB 25	SB 30	SB 40
Axial diameter	16	20	25	30	40
Tolerance(h6)	0 −0.011	0 −0.013			0 −0.016

Table 6. Europe Series

Unit : mm

Model No.	SBE 16	SBE 20	SBE 25	SBE 30	SBE 40	SBE 50
Axial diameter	16	20	25	30	40	50
Tolerance(h6)	0 −0.011	0 −0.013			0 −0.016	

Table 7. Inch Series

Unit : inch

Model No.	SBA 4	SBA 6	SBA 8	SBA 10	SBA 12	SBA 16	SBA 20	SBA24
Axial diameter	0.25	0.375	0.5	0.625	0.75	1	1.25	1.5
Tolerance(h6)	−0.0002 −0.0006		−0.0002 −0.0007		−0.0003 −0.0008		−0.0004 −0.0010	

4 Assembly

As for WON Super Ball Bushing, good to use a jig in order for housing fitting. In this case, be careful not to impose any pressure on a retainer or seal. For shaft fitting, required to get corner of a shaft chamfered, and careful not to make Won Super Ball Bushing tilted in assembly.

Life shortening in a short distance

In a short stroke distance, life of a shaft is shorter than that of a ball bushing. Possible to shorten a service life up to about 70% depending on a stroke distance.

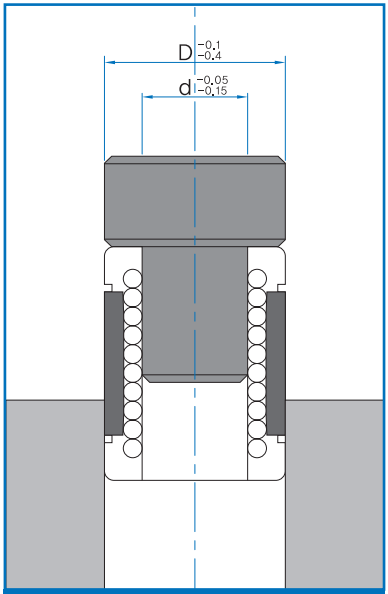

Figure 9.

SB Series

Asia Series Super Ball Bushing

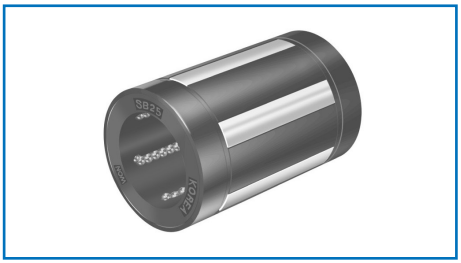

Closed type

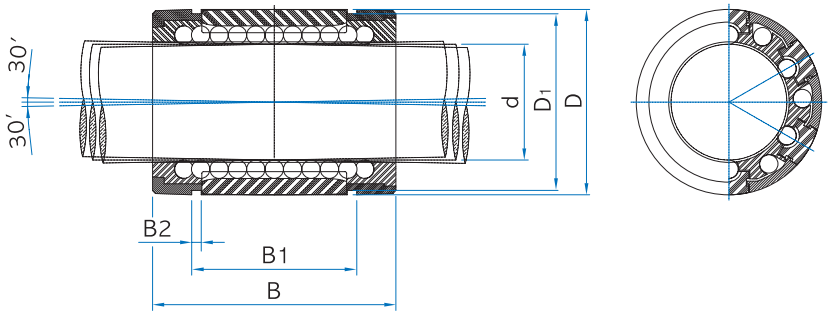

Unit : mm

Model No.			Main dimensions					Diameter of shaft d	No. of ball rows	Basic load rating		Weight (g)
No seal	Seal on one side	Seals on both sides	D	D_1	B	B_1	B_2			Dynamic C (N)	Static Co (N)	
SB 16	SB 16U	SB 16UU	28	27	37	26.5	1.6	16	5	1240	800	34
SB 20	SB 20U	SB 20UU	32	30.5	42	30.5	1.6	20	6	2280	1400	58
SB 25	SB 25U	SB 25UU	40	38.5	59	44	1.9	25	6	3980	2465	120
SB 30	SB 30U	SB 30UU	45	43	64	48	1.7	30	6	4420	2800	148
SB 40	SB 40U	SB 40UU	60	58	80	60.9	2.05	40	6	8980	5460	314

1N ≒ 0.102kgf

SBO Series

Asia Series Super Ball Bushing

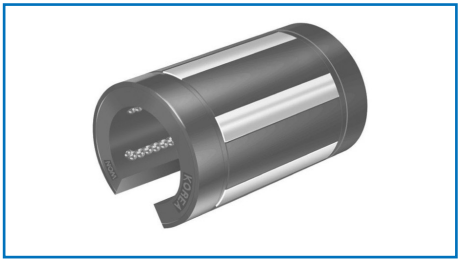

Open Type

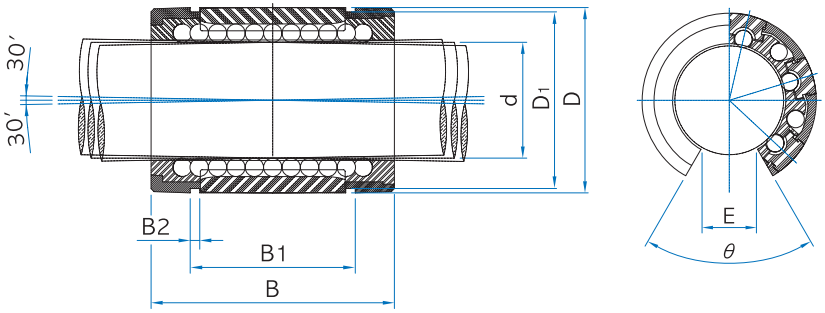

Unit : mm

Model No.			Main dimensions						Angle θ	Diameter of shaft d	No. of ball rows	Basic load rating		Weight (g)
No seal	Seal on one side	Seals on both sides	D	D_1	B	B_1	B_2	E				Dynamic C (N)	Static Co (N)	
SBO 16	SBO 16U	SBO 16UU	28	27	37	26.5	1.6	11	60°	16	4	1410	960	26
SBO 20	SBO 20U	SBO 20UU	32	30.5	42	30.5	1.6	11	60°	20	5	2300	1430	48
SBO 25	SBO 25U	SBO 25UU	40	38.5	59	44	1.9	12.5	60°	25	5	4030	2540	100
SBO 30	SBO 30U	SBO 30UU	45	43	64	48	1.7	15	60°	30	5	4475	2890	122
SBO 40	SBO 40U	SBO 40UU	60	58	80	60.9	2.05	20	60°	40	5	9100	5625	262

1N ≒ 0.102kgf

SH Series

Asia Series Super Ball Bushing Block

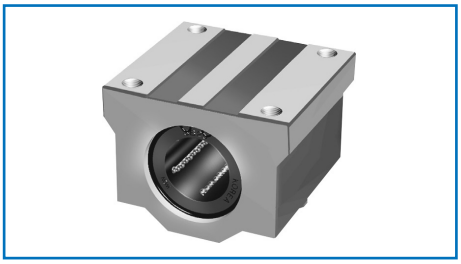

Closed Type (Ball Bushing: 1 pc of SB series)

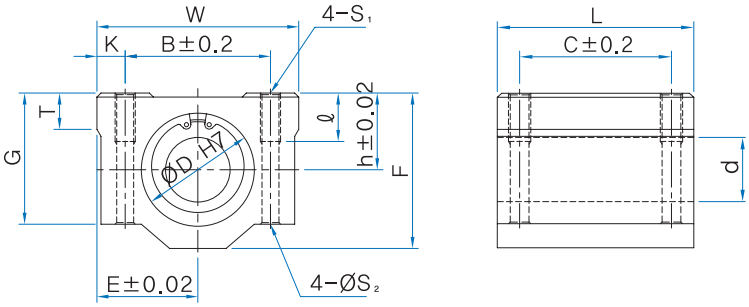

Unit : mm

Model No.	Main dimensions								Mounting dimensions						Diameter of shaft d	Basic load rating		Weight (g)
	D	h	E	W	L	F	G	T	B	C	K	S_1	S_2	ℓ		Dynamic C (N)	Static Co (N)	
SH 16UU	28	19	25	50	44	38.5	32.5	9	36	34	7	M5	4.3	12	16	1240	800	148
SH 20UU	32	21	27	54	50	41	35	11	40	40	7	M6	5.2	12	20	2280	1400	198
SH 25UU	40	26	38	76	67	51.5	42	12	54	50	11	M8	7	18	25	3980	2465	472
SH 30UU	45	30	39	78	72	59.5	49	15	58	58	10	M8	7	18	30	4420	2800	589
SH 40UU	60	40	51	102	90	78	62	20	80	60	11	M10	8.7	25	40	8980	5460	1225
SH 50UU	75	52	61	122	110	102	80	25	100	80	11	M10	8.7	25	50	12965	7940	2420

1N ≒ 0.102kgf

SHW Series

Asia Series Super Ball Bushing Block

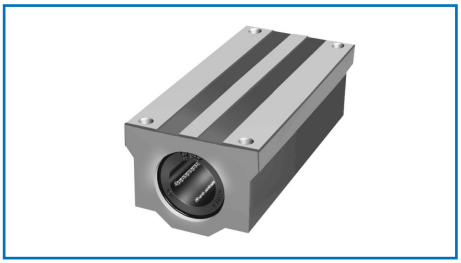

Double Closed Type (Ball Bushing: 2pcs of SB Series)

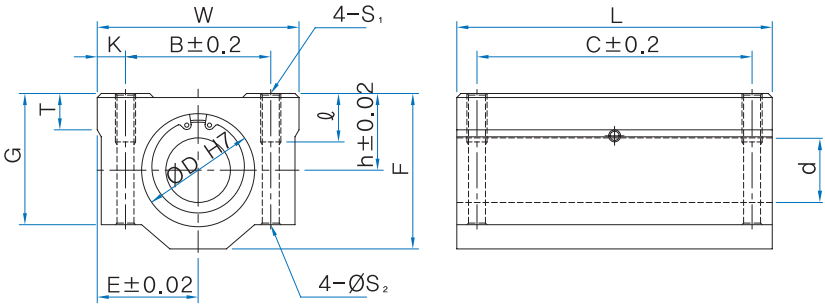

Unit : mm

Model No.	Main dimensions								Mounting dimensions						Diameter of shaft d	Basic load rating		Weight (g)
	D	h	E	W	L	F	G	T	B	C	K	S_1	S_2	ℓ		Dynamic C (N)	Static Co (N)	
SHW 16UU	28	19	25	50	85	38.5	32.5	9	36	60	7	M5	4.3	12	16	1965	1600	308
SHW 20UU	32	21	27	54	96	41	35	11	40	70	7	M6	5.2	12	20	3615	2800	422
SHW 25UU	40	26	38	76	130	51.5	42	12	54	100	11	M8	7	18	25	6315	4930	972
SHW 30UU	45	30	39	78	140	59.5	49	15	58	110	10	M8	7	18	30	7015	5600	1180
SHW 40UU	60	40	51	102	175	78	62	20	80	140	11	M10	8.7	25	40	14255	10920	2461

1N ≒ 0.102kgf

SH-A Series

Asia Series Super Ball Bushing Block

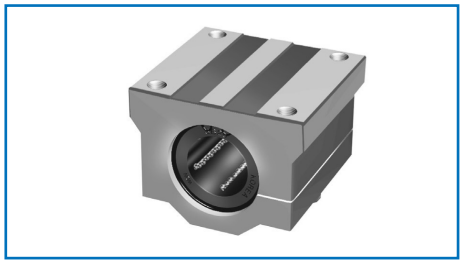

Closed and Clearance Adjustment Type (Ball Bushing: 1 pc of SB Series)

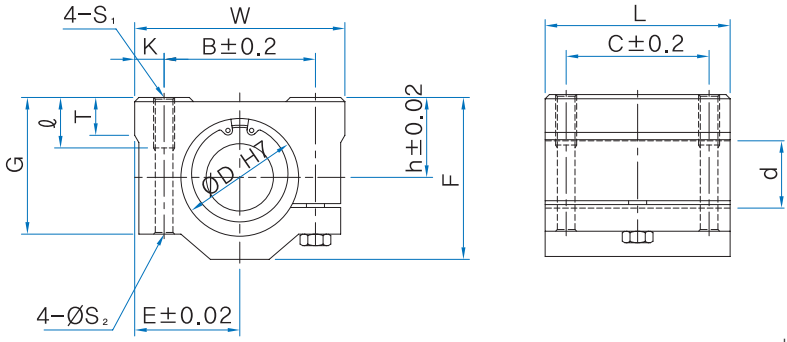

Unit : mm

Model No.	Main dimensions								Mounting dimensions						Diameter of shaft d	Basic load rating		Weight (g)
	D	h	E	W	L	F	G	T	B	C	K	S_1	S_2	ℓ		Dynamic C (N)	Static Co (N)	
SH 16AUU	28	19	25	50	44	38.5	32.5	9	36	34	7	M5	4.3	12	16	1240	800	160
SH 20AUU	32	21	27	54	50	41	35	11	40	40	7	M6	5.2	12	20	2280	1400	218
SH 25AUU	40	26	38	76	67	51.5	42	12	54	50	11	M8	7	18	25	3980	2465	490
SH 30AUU	45	30	39	78	72	59.5	49	15	58	58	10	M8	7	18	30	4420	2800	610
SH 40AUU	60	40	51	102	90	78	62	20	80	60	11	M10	8.7	25	40	8980	5460	1200
SH 50AUU	75	52	61	122	110	102	80	25	100	80	11	M10	8.7	25	50	12965	7940	2400

1N ≒ 0.102kgf

SHO Series

Asia Series Super Ball Bushing Block

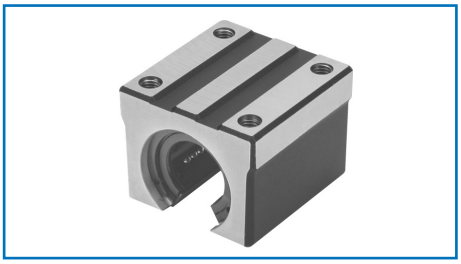

Open Type (Ball Bushing: 1 pc of SBO Series)

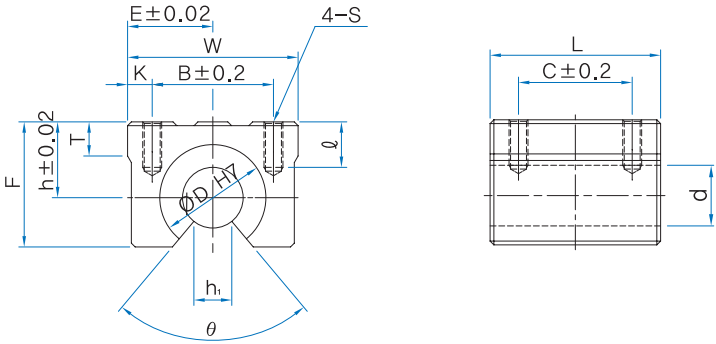

Unit : mm

Model No.	Main dimensions								Mounting dimensions						Diameter of shaft d	Basic load rating		Weight (g)
	D	h	E	W	L	F	G	T	B	C	K	S_1	S_2	ℓ		Dynamic C (N)	Static Co (N)	
SHO 16UU	28	20	22.5	45	45	33	9	11	60°	32	30	6.5	M5	12	16	1410	960	124
SHO 20UU	32	23	24	48	50	39	11	11	60°	35	35	6.5	M6	12	20	2300	1430	178
SHO 25UU	40	27	30	60	65	47	14	12.5	60°	40	40	10	M6	12	25	4030	2540	352
SHO 30UU	45	33	35	70	70	56	15	15	60°	50	50	10	M8	18	30	4475	2890	507
SHO 40UU	60	42	45	90	90	72	20	20	60°	65	65	12.5	M10	20	40	9100	5625	1055

1N ≒ 0.102kgf

SBE Series

Europe Series Super Ball Bushing

Closed Type

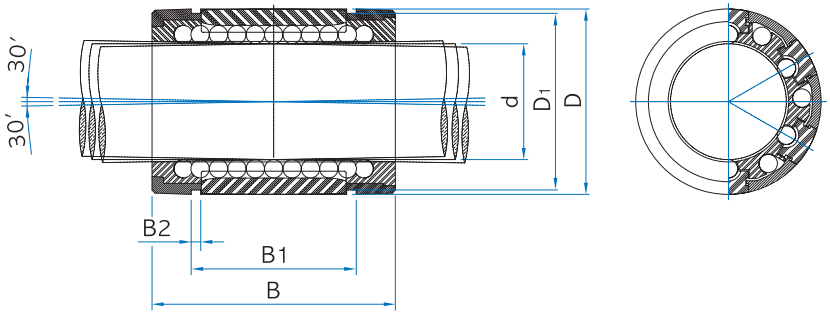

Unit : mm

Model No.			Main dimensions					Diameter of shaft d	No. of ball rows	Basic load rating		Weight (g)
No seal	Seal on one side	Seals on both sides	D	D_1	B	B_1	B_2			Dynamic C (N)	Static Co (N)	
SBE 16	SBE 16U	SBE 16UU	26	24.5	36	25	1.4	16	5	1140	710	26
SBE 20	SBE 20U	SBE 20UU	32	30.5	45	31.5	1.65	20	6	2280	1400	60
SBE 25	SBE 25U	SBE 25UU	40	38.5	58	44	2	25	6	4280	2740	120
SBE 30	SBE 30U	SBE 30UU	47	46.4	68	52	1.6	30	6	5020	3365	184
SBE 40	SBE 40U	SBE 40UU	62	58	80	60.5	2.15	40	6	8980	5460	342
SBE 50	SBE 50U	SBE 50UU	75	71	100	77.5	3.65	50	6	12965	7940	586

1N ≒ 0.102kgf

SBEO Series

Europe Series Super Ball Bushing

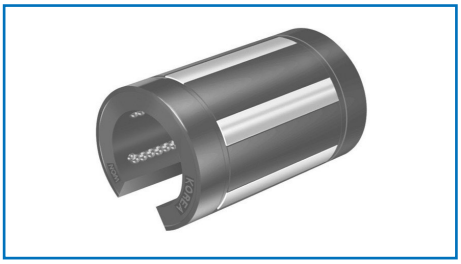

Open Type

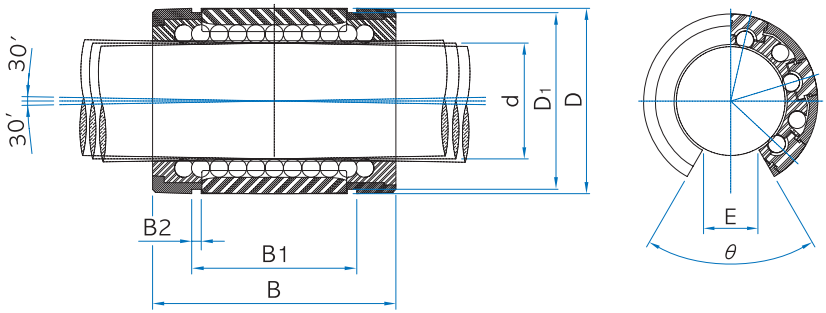

Unit : mm

Model No.			Main dimensions						Angle θ	Diameter of shaft d	No. of ball rows	Basic load rating		Weight (g)
No seal	Seal on one side	Seals on both sides	D	D_1	B	B_1	B_2	E				Dynamic C (N)	Static Co (N)	
SBEO 16	SBEO 16U	SBEO 16UU	26	24.5	36	25	1.4	9	68°	16	4	1330	910	20
SBEO 20	SBEO 20U	SBEO 20UU	32	30.5	45	31.5	1.65	9	55°	20	5	2310	1445	50
SBEO 25	SBEO 25U	SBEO 25UU	40	38.5	58	44	2	11.5	57°	25	5	4330	2820	100
SBEO 30	SBEO 30U	SBEO 30UU	47	46.4	68	52	1.6	14	57°	30	5	5080	3460	154
SBEO 40	SBEO 40U	SBEO 40UU	62	58	80	60.5	2.15	19.5	56°	40	5	9095	5625	286
SBEO 50	SBEO 50U	SBEO 50UU	75	71	100	77.5	3.65	22.5	54°	50	5	13130	8175	486

1N ≒ 0.102kgf

CS Series

Europe Series Super Ball Bushing

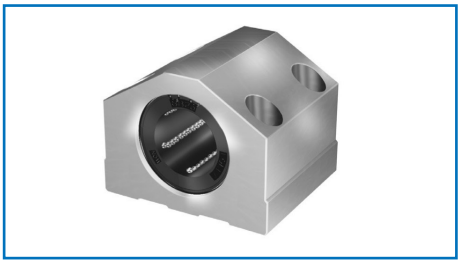

Closed Type (Ball Bushing: 1 pc of SBE Series)

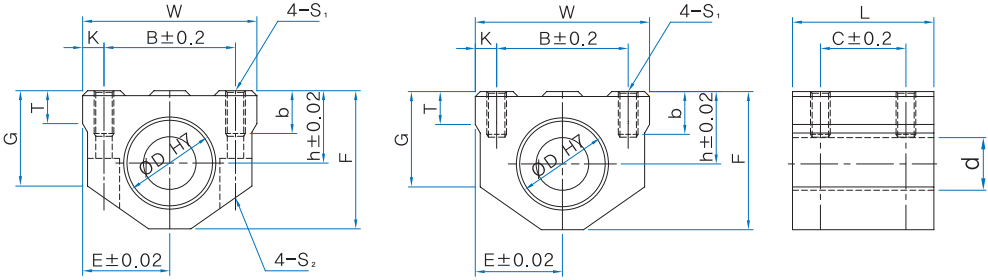

B Type

Unit : mm

Model No.	Main dimensions								Mounting dimensions						Diameter of shaft d	No. of ball rows	Basic load rating		Weight (g)
	D	h	E	W	L	F	G	T	B	C	K	b	S_1	S_2			Dynamic C (N)	Static Co (N)	
CS 16UU	26	22	26.5	53	43	42	29	10	40	26	6.5	13	M6	–	16	5	1140	710	204
CS 16UU−B														M5					
CS 20UU	32	25	30	60	54	50	34	12	45	32	7.5	18	M8	–	20	6	2280	1400	340
CS 20UU−B														M6					
CS 25UU	40	30	39	78	67	60	40	15	60	40	9	22	M10	–	25	6	4280	2740	636
CS 25UU−B														M8					
CS 30UU	47	35	43.5	87	79	70	48	17	68	45	9.5	22	M10	–	30	6	5020	3365	970
CS 30UU−B														M8					
CS 40UU	62	45	54	108	91	90	62	22	86	58	11	26	M12	–	40	6	8980	5460	1740
CS 40UU−B														M10					
CS 50UU	75	50	66	132	113	105	68	25	108	50	12	34	M16	–	50	6	12965	7940	2922
CS 50UU−B														M12					

1N ≒ 0.102kgf

CS-A Series

Europe Series Super Ball Bushing

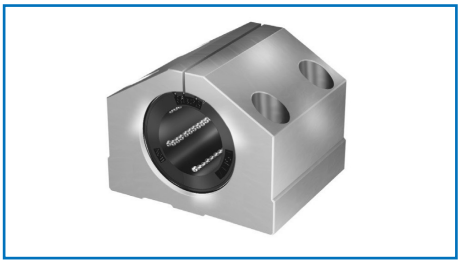

Double Closed Type (Ball Bushing: 2pcs of SBE Series)

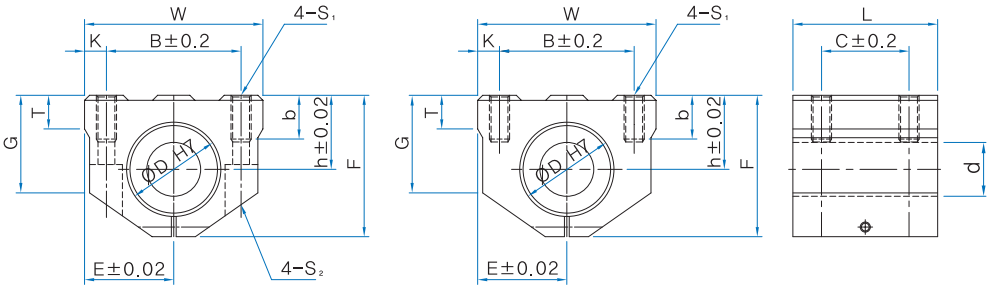

B Type

Unit : mm

Model No.	Main dimensions								Mounting dimensions						Diameter of shaft d	No. of ball rows	Basic load rating		Weight (g)
	D	h	E	W	L	F	G	T	B	C	K	b	S_1	S_2			Dynamic C (N)	Static Co (N)	
CS 16AUU	26	22	26.5	53	43	42	29	10	40	26	6.5	13	M6	–	16	5	1140	710	192
CS 16AUU-B														M5					
CS 20AUU	32	25	30	60	54	50	34	12	45	32	7.5	18	M8	–	20	6	2280	1400	322
CS 20AUU-B														M6					
CS 25AUU	40	30	39	78	67	60	40	15	60	40	9	22	M10	–	25	6	4280	2740	632
CS 25AUU-B														M8					
CS 30AUU	47	35	43.5	87	79	70	48	17	68	45	9.5	22	M10	–	30	6	5020	3365	965
CS 30AUU-B														M8					
CS 40AUU	62	45	54	108	91	90	62	22	86	58	11	26	M12	–	40	6	8980	5460	1736
CS 40AUU-B														M10					
CS 50AUU	75	50	66	132	113	105	68	25	108	50	12	34	M16	–	50	6	12965	7940	2910
CS 50AUU-B														M12					

1N ≒ 0.102kgf

CSW Series

Europe Series Super Ball Bushing

Double Closed Type (Ball Bushing: 2pcs of SBE Series)

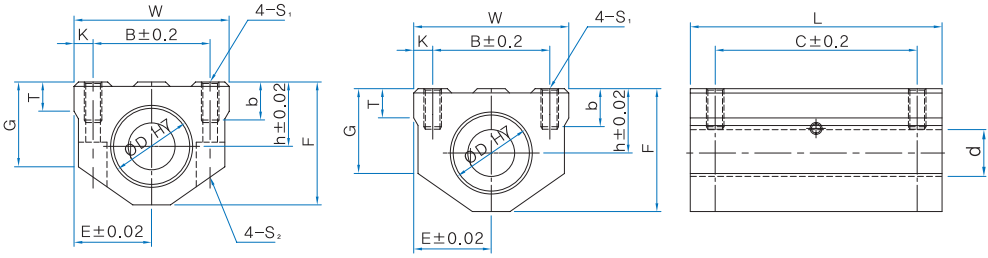

B Type

Unit : mm

Model No.	Main dimensions								Mounting dimensions						Diameter of shaft d	No. of ball rows	Basic load rating		Weight (g)
	D	h	E	W	L	F	G	T	B	C	K	b	S1	S2			Dynamic C (N)	Static Co (N)	
CSW 16 UU	26	22	26.5	53	84	42	29	10	40	64	6.5	13	M6	–	16	5	1810	1420	380
CSW 16 UU−B														M5					
CSW 20 UU	32	25	30	60	104	50	34	12	45	76	7.5	18	M8	–	20	6	3615	2800	640
CSW 20 UU−B														M6					
CSW 25 UU	40	30	39	78	130	60	40	15	60	94	9	22	M10	–	25	6	6790	5480	1248
CSW 25 UU−B														M8					
CSW 30 UU	47	35	43.5	87	152	70	48	17	68	106	9.5	22	M10	–	30	6	7965	6730	1890
CSW 30 UU−B														M8					
CSW 40 UU	62	45	54	108	176	90	62	22	86	124	11	26	M12	–	40	6	14255	10920	3404
CSW 40 UU−B														M10					
CSW 50 UU	75	50	66	132	224	105	68	25	108	160	12	34	M16	–	50	6	20580	15880	5856
CSW 50 UU−B														M12					

1N ≒ 0.102kgf

CSW-A Series

Europe Series Super Ball Bushing

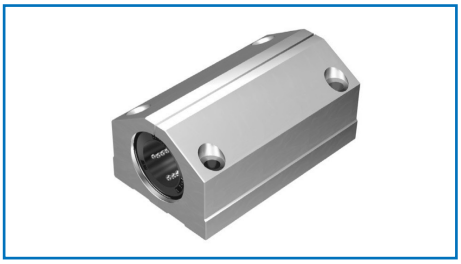

Closed and Clearance Adjustment Type (Ball Bushing: 2pcs of SBE Series)

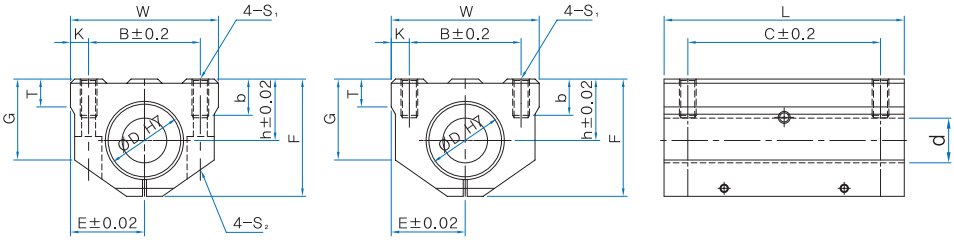

B Type

Unit : mm

Model No.	Main dimensions								Mounting dimensions						Diameter of shaft d	No. of ball rows	Basic load rating		Weight (g)
	D	h	E	W	L	F	G	T	B	C	K	b	S_1	S_2			Dynamic C (N)	Static Co (N)	
CSW 16AUU	26	22	26.5	53	84	42	29	10	40	64	6.5	13	M6	–	16	5	1810	1420	364
CSW 16AUU-B														M5					
CSW 20AUU	32	25	30	60	104	50	34	12	45	76	7.5	18	M8	–	20	6	3615	2800	614
CSW 20AUU-B														M6					
CSW 25AUU	40	30	39	78	130	60	40	15	60	94	9	22	M10	–	25	6	6790	5480	1212
CSW 25AUU-B														M8					
CSW 30AUU	47	35	43.5	87	152	70	48	17	68	106	9.5	22	M10	–	30	6	7965	6730	1252
CSW 30AUU-B														M8					
CSW 40AUU	62	45	54	108	176	90	62	22	86	124	11	26	M12	–	40	6	14255	10920	3310
CSW 40AUU-B														M10					
CSW 50AUU	75	50	66	132	224	105	68	25	108	160	12	34	M16	–	50	6	20580	15880	5856
CSW 50AUU-B														M12					

1N ≒ 0.102kgf

CSO Series

Europe Series Super Ball Bushing

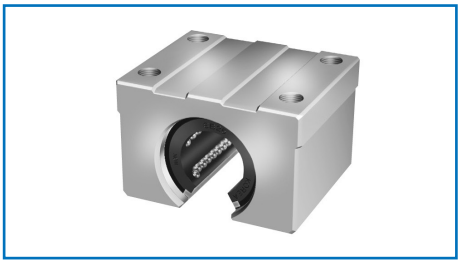

Open Type (Ball Bushing: 1pc of SBEO Series)

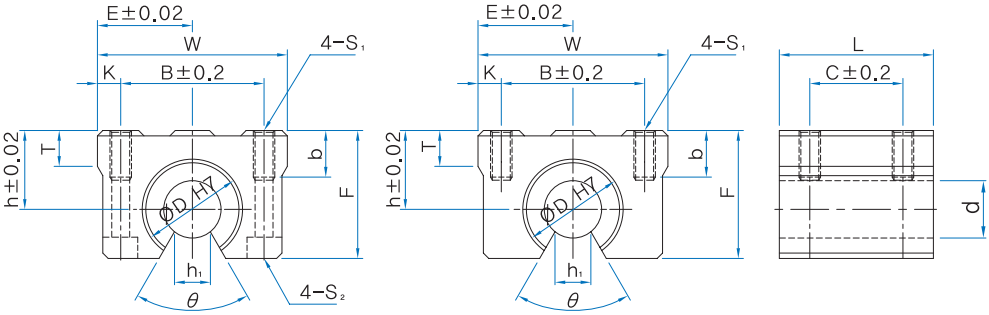

B Type

Unit : mm

Model No.	Main dimensions									Mounting dimensions						Diameter of shaft d	No. of ball rows	Basic load rating		Weight (g)
	D	h	E	W	L	F	T	h1	θ	B	C	K	b	S1	S2			Dynamic C (N)	Static Co (N)	
CSO 16UU	26	22	26.5	53	43	35	8	9	68°	40	26	6.5	13	M6	–	16	4	1330	910	160
CSO 16UU-B															M5					
CSO 20UU	32	25	30	60	54	42	10	9	55°	45	32	7.5	18	M8	–	20	5	2310	1445	280
CSO 20UU-B															M6					
CSO 25UU	40	30	39	78	67	51	13	11.5	57°	60	40	9	22	M10	–	25	5	4330	2820	552
CSO 25UU-B															M8					
CSO 30UU	47	35	43.5	87	79	60	15	14	57°	68	45	9.5	22	M10	–	30	5	5080	3460	846
CSO 30UU-B															M8					
CSO 40UU	62	45	54	108	91	77	20	19.5	56°	86	58	11	26	M12	–	40	5	9095	5625	1516
CSO 40UU-B															M10					
CSO 50UU	75	50	66	132	113	88	25	22.5	54°	108	50	12	34	M16	–	50	5	13130	8175	2546
CSO 50UU-B															M12					

1N ≒ 0.102kgf

CSO-A Series

Europe Series Super Ball Bushing

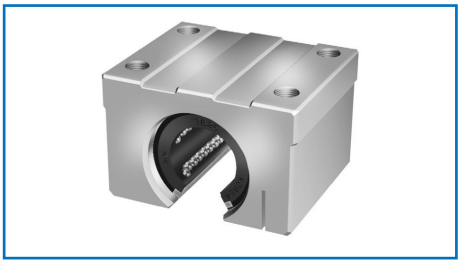

Open Type (Ball Bushing: 1pc of SBEO Series)

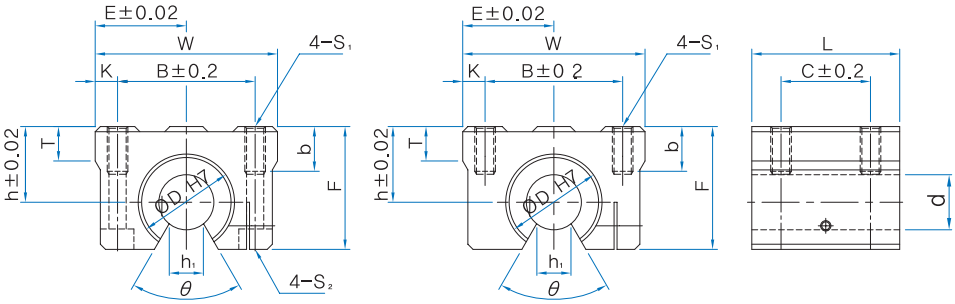

B Type

Unit : mm

Model No.	Main dimensions									Mounting dimensions						Diameter of shaft d	No. of ball rows	Basic load rating		Weight (g)
	D	h	E	W	L	F	T	h1	θ	B	C	K	b	S_1	S_2			Dynamic C (N)	Static Co (N)	
CSO 16AUU	26	22	26.5	53	43	35	8	9	68°	40	26	6.5	13	M6	–	16	4	1330	910	158
CSO 16AUU-B															M5					
CSO 20AUU	32	25	30	60	54	42	10	9	55°	45	32	7.5	18	M8	–	20	5	2310	1445	277
CSO 20AUU-B															M6					
CSO 25AUU	40	30	39	78	67	51	13	11.5	57°	60	40	9	22	M10	–	25	5	4330	2820	548
CSO 25AUU-B															M8					
CSO 30AUU	47	35	43.5	87	79	60	15	14	57°	68	45	9.5	22	M10	–	30	5	5080	3460	840
CSO 30AUU-B															M8					
CSO 40AUU	62	45	54	108	91	77	20	19.5	56°	86	58	11	26	M12	–	40	5	9095	5625	1510
CSO 40AUU-B															M10					
CSO 50AUU	75	50	66	132	113	88	25	22.5	54°	108	50	12	34	M16	–	50	5	13130	8175	2535
CSO 50AUU-B															M12					

1N ≒ 0.102kgf

CSOW Series

Europe Series Super Ball Bushing

Double Open Type (Ball Bushing: 2pcs of SBEO Series)

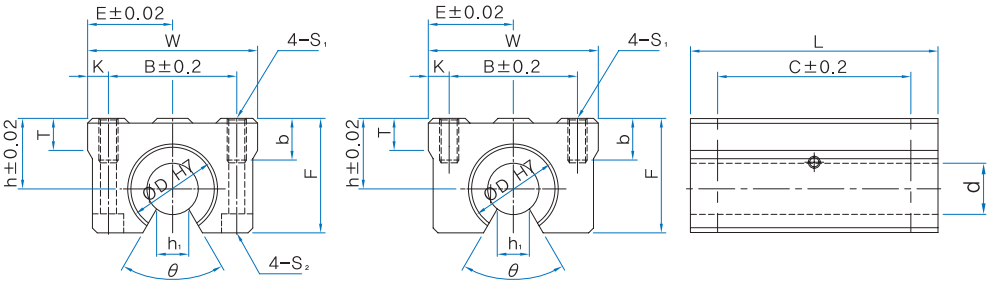

B Type

Unit : mm

Model No.	Main dimensions									Mounting dimensions						Diameter of shaft d	No. of ball rows	Basic load rating		Weight (g)
	D	h	E	W	L	F	T	h1	θ	B	C	K	b	S1	S2			Dynamic C (N)	Static Co (N)	
CSOW 16UU	26	22	26.5	53	84	35	8	9	68°	40	64	6.5	13	M6	–	16	4	2110	1820	338
CSOW 16UU−B															M5					
CSOW 20UU	32	25	30	60	104	42	10	9	55°	45	76	7.5	18	M8	–	20	5	3660	2890	552
CSOW 20UU−B															M6					
CSOW 25UU	40	30	39	78	130	51	13	11.5	57°	60	94	9	22	M10	–	25	5	6870	5640	1092
CSOW 25UU−B															M8					
CSOW 30UU	47	35	43.5	87	152	60	15	14	57°	68	106	9.5	22	M10	–	30	5	8060	6920	1656
CSOW 30UU−B															M8					
CSOW 40UU	62	45	54	108	176	77	20	19.5	56°	86	124	11	26	M12	–	40	5	14430	11250	3062
CSOW 40UU−B															M10					
CSOW 50UU	75	50	66	132	224	88	25	22.5	54°	108	160	12	35	M16	–	50	5	20840	16350	5042
CSOW 50UU−B															M12					

1N ≒ 0.102kgf

CSOW-A Series

Europe Series Super Ball Bushing

Double Open and Clearance Adjustment Type (Ball Bushing: 2pcs of SBEO Series)

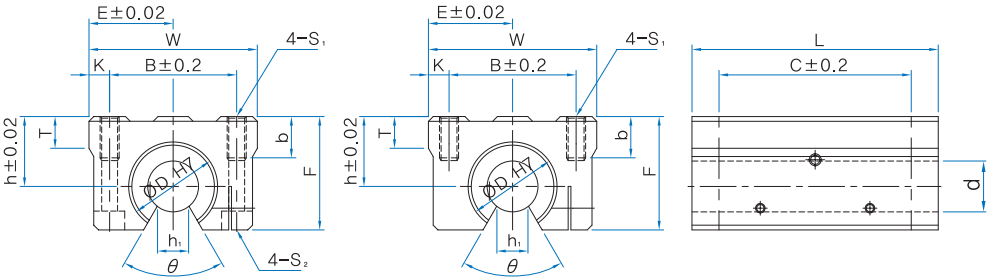

B Type

Unit : mm

Model No.	Main dimensions									Mounting dimensions						Diameter of shaft d	No. of ball rows	Basic load rating		Weight (g)
	D	h	E	W	L	F	T	h1	θ	B	C	K	b	S1	S2			Dynamic C (N)	Static Co (N)	
CSOW 16AUU	26	22	26.5	53	84	35	8	9	68°	40	64	6.5	13	M6	–	16	4	2110	1820	330
CSOW 16AUU-B															M5					
CSOW 20AUU	32	25	30	60	104	42	10	9	55°	45	76	7.5	18	M8	–	20	5	3660	2890	540
CSOW 20AUU-B															M6					
CSOW 25AUU	40	30	39	78	130	51	13	11.5	57°	60	94	9	22	M10	–	25	5	6870	5640	1080
CSOW 25AUU-B															M8					
CSOW 30AUU	47	35	43.5	87	152	60	15	14	57°	68	106	9.5	22	M10	–	30	5	8060	6920	1645
CSOW 30AUU-B															M8					
CSOW 40AUU	62	45	54	108	176	77	20	19.5	56°	86	124	11	26	M12	–	40	5	14430	11250	3045
CSOW 40AUU-B															M10					
CSOW 50AUU	75	50	66	132	224	88	25	22.5	54°	108	160	12	35	M16	–	50	5	20840	16350	5030
CSOW 50AUU-B															M12					

1N ≒ 0.102kgf

SBA Series
Inch Series Ball Bushing

SBAO Series
Inch Series Ball Bushing

Unit : inch

Model No.	Main dimensions							Diameter of shaft		No. of ball rows	Basic load rating		Weight (g)
	D	B	Tolerance	B_1	Tolerance	B_2	D_1	d	Tolerance		Dynamic C (N)	Static Co (N)	
SBA4	0.5	0.75	0 -0.015	0.515	0 -0.015	0.039	0.4687	0.25	0 -0.0005	4	265	355	4.08
SBA6	0.625	0.875	0 -0.015	0.703	0 -0.015	0.039	0.588	0.375	0 -0.0005	4	420	530	6.35
SBA8	0.875	1.25	0 -0.02	1.032	0 -0.02	0.0459	0.8209	0.5	0 -0.0005	4	1020	1290	19.50
SBA10	1.125	1.5	0 -0.02	1.112	0 -0.02	0.0559	1.059	0.625	0 -0.0005	5	1780	2220	46.72
SBA12	1.25	1.625	0 -0.02	1.272	0 -0.02	0.0559	1.176	0.75	0 -0.0005	6	2090	2620	55.79
SBA16	1.5625	2.25	0 -0.02	1.886	0 -0.02	0.0679	1.4687	1	0 -0.0005	6	3780	4710	120.20
SBA20	2	2.625	0 -0.025	2.011	0 -0.025	0.0679	1.8859	1.25	0 -0.0006	6	5470	6800	219.99
SBA24	2.375	3	0 -0.03	2.422	0 -0.03	0.0859	2.2389	1.5	0 -0.0006	6	6580	8220	340.19

※ 1 inch=25.4mm
1N ≒ 0.102kgf

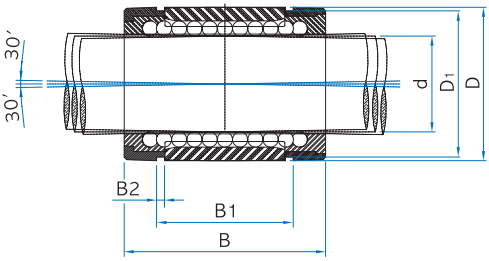

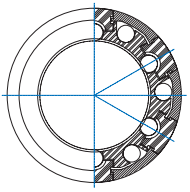

SBA Series

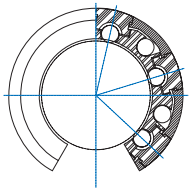

SBAO Series

Unit : inch

Model No.	Main dimensions								Diameter of shaft		Fixture pinhole			No. of ball rows	Basic load rating		Weight (g)
	D	B	Tolerance	B1	Tolerance	B2	D1	h	d	Tolerance	F	G	J		Dynamic C (N)	Static Co (N)	
SBAO8	0.875	1.25	0 -0.02	1.032	0 -0.02	0.0459	0.8209	0.313	0.5	0 -0.0005	0.136	0.625	Penetrated	3	1020	1290	14.97
SBAO10	1.125	1.5	0 -0.02	1.112	0 -0.02	0.0559	1.059	0.375	0.625	0 -0.0005	0.105	0.125	0.039	4	1780	2220	37.65
SBAO12	1.25	1.625	0 -0.02	1.272	0 -0.02	0.0559	1.176	0.438	0.75	0 -0.0005	0.136	0.125	0.059	5	2090	2620	46.27
SBAO16	1.5625	2.25	0 -0.02	1.886	0 -0.02	0.0679	1.4687	0.563	1	0 -0.0005	0.136	0.125	0.047	5	3780	4710	99.79
SBAO20	2	2.625	0 -0.025	2.011	0 -0.025	0.0679	1.8859	0.625	1.25	0 -0.0006	0.201	0.1875	0.09	5	5470	6800	190.06
SBAO24	2.375	3	0 -0.03	2.422	0 -0.03	0.0859	2.2389	0.75	1.5	0 -0.0006	0.201	0.1875	0.09	5	6580	8220	289.85

※ 1 inch=25.4mm
1N ≒ 0.102kgf

Fixture pinhole

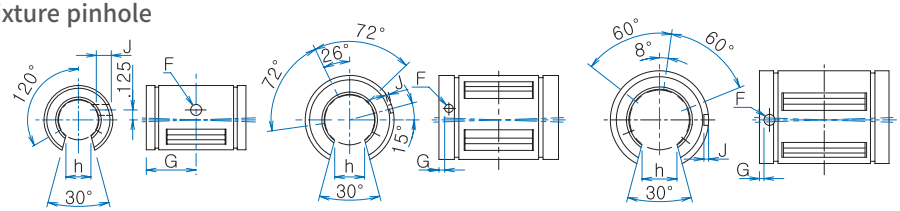

SBAO8 SBAO10 SBAO12 ~ SBAO24

WON

LINEAR MOTION SYSTEM

Linear Ball Bushing
Contents

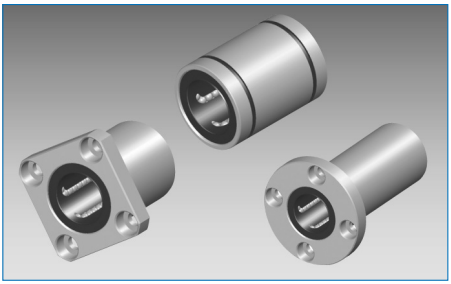

1 Linear Ball Bushing

WON Linear Ball Bushing Linear Motion Series has the infinite linear motion system in combination with a cylindrical linear motion shaft. Since a load ball and a linear motion shaft have a contact point, the device has low allowable load, but has a rolling motion with minimum frictional resistance and a highly precise and light motion.

1. Structure and Features

In the linear ball bushing linear motion series, the ball rolling surface of the linear motion shaft and outer sleeve has a cylindrical shape, and the load balls are aligned in the linear motion shaft direction by a retainer, as shown in Figure 1.
The outer sleeve is made of high carbon chromium bearing steel. The inside diameter and outside diameter are polished after heat treatment.

2. Compatibility

This product has compatibility because the dimensional tolerance of each part of a linear ball bushing is standardized. A linear motion shaft is easily cylindrical-polished. So, it is possible to obtain fitting clearance with high precision.

3. Outer sleeve with rigidity

Since the outer sleeve is made of strong bearing steel, it is possible to put a needle bearing in the outside diameter.

4. Retainer with high precision

A retainer guiding 4 to 6 ball rows has an integral structure. So, it guides the ball direction accurately and helps to secure stable running precision.

5. Use

A linear ball bushing is widely applied to various kinds of equipment, such as computer and pe ripheral equipment, measuring equipment, auto recording equipment, 3D measuring equipment, multi-axis drilling machine,, punching press, tool grinder, automatic gas cutting machine, printing machine, food packing machine, linear motion guides, athletic equipment, and wood equipment.

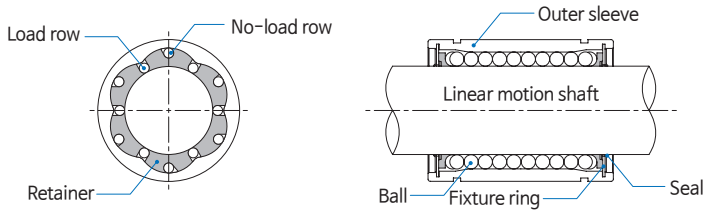

Figure 1. Structure of WON Linear Ball Bushing

2 Types and Features

Classification	Type	Shape and Feature	
Linear Ball Bushing	Standard Type LM LME		Cylindrical shape with high precision
	Open Type LM□OP LME□OP	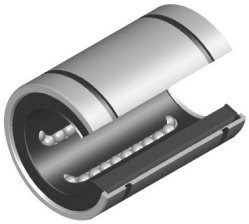	Cutting the one ball row of the outer sleeve and using it in the place where a shaft support is used
	Adjustable Clearance Type LM□AJ LME□AJ		Cutting in the length direction of the outer sleeve and easily adjusting a shaft and a gap
	Long Type LM□L LME□L		Two retainers connected to the outer sleeve; optimal to the place to which moment is applied

Classification	Type	Shape and Feature	
Flange Type Linear Ball Bushing	Round Type LMF	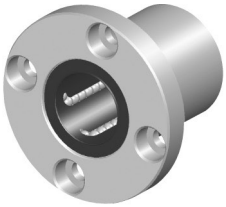	An integral structure; easy-to-install
	Square Type LMK	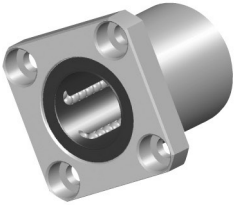	Lower height of the center than that of round-type flange; supporting compact design
	Oval Type LMH	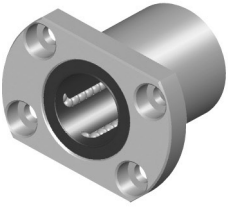	Lower height of the center than that of round-type flange; supporting compact design
	Long type LMF□L LMK□L	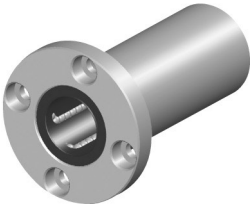	Two retainers connected to the outer sleeve; optimal to the place to which moment is applied

3 Model number composition of linear ball bushing

LM □ □ 20 □ UU □□

WON Linear Ball Bushing

Model
- : Standard Series
E : Europe Series

Flange Shape
- : No flange
F : Round type
K : Square type
H : Oval type

Outside diameter of linear motion shaft

Length
- : Standard
L : Long

Seal
- : No seal
U : Seal on one side
UU : Seal on both sides

Type
- : Cylindrical type
OP : Open type
AJ : Adjustable clearance type

1. Precision specification

The precision values of the inside diameter, outside diameter, width, etc. of a linear ball bushing are described in the table of dimensions. The precision values of the inside diameter and outside diameter of the adjustable clearance type (..AJ) and open type (..OP) mean the values before opening.

2. Load rating and life

The load rating of a linear ball bushing depends on position of a ball for a load direction. The value of the basic load rating presented in the table of dimensions means the value at the time when a load ball in the row 1 is right under load. If the ball installed has symmetric load for a load direction, load rating increases as shown in Figure 2, and thus life performance of the device can be improved. Life of a linear ball bushing is calculated in the following formula:

$$L = \left(\frac{f_H \cdot f_C \cdot f_T}{f_W} \times \frac{C}{P}\right)^3 \times 50$$

$$L_{100} = \left(\frac{f_H \cdot f_C \cdot f_T}{f_W} \times \frac{C_{100}}{P}\right)^3 \times 100$$

L	: Rating life	(km)
L_{100}	: Rating life	(km)
C	: Basic load rating	(N)
C_{100}	: Basic load rating (C/1.26)	(N)
P	: Load	(N)
f_H	: Hardness factor	
f_W	: Load factor	
f_C	: Contact factor	
f_T	: Temperature factor	

Figure 2. Load rating according to ball-row arrangement

No. of ball rows	Ball position		No. of ball rows	Ball position		No. of ball rows	Ball position	
	Max. load	Min. load		Max. load	Min. load		Max. load	Min. load
4			5			6		
	F=1.41×C	F=C		F=1.46×C	F=C		F=1.26×C	F=C

C: See the table of dimensions

- If one outer sleeve or two in contact is used and moment is applied, it is required to calculate the equivalent radial load at the time when moment is applied.

$$P_U \fallingdotseq K \cdot M$$

P_U : Equivalent radial load (when moment is applied) (N)
K : Equivalent factor (See Tables 1 to 3.)
M : Load moment (N · mm)

In this case, P_U should be within basic static load rating (Co).

- If both moment and radial load are applied at the same time, it is necessary to calculate a life in the way of adding up the radial load and equivalent radial load. After the value (L) is obtained in the above formula, it is possible to calculate life hours in the following formula in the condition where the length of stroke and the number of strokes are constant.

$$L_h = \frac{L \times 10^3}{2 \times \ell_s \times n_1 \times 60}$$

L_h : Life hours (hr)
ℓ_s : Stroke length (m)
n_1 : Number of strokes per minute (o.p.m)

- In the case of short stroke, it is possible to calculate life hours in the way of multiplying basic static load rating by length factor (Kc).

3. An example of calculation

The main influential factors on the determination of an optimal linear bushing model number are maximum load and life. How to calculate an expected life and to determine an appropriate linear ball bushing model number is presented in the following example.

-Service conditions-

- Operating speed

$$V = 2 \times \ell_s \times n_1$$
$$= 2 \times 0.250 \times 60$$
$$= 30 \text{ m/min} \quad (f_W = 1.6)$$

Applied load : 250 N (P)
Stroke : 0.0250 m (ℓ_s)
Number of strokes per minute : 60 (n_1)
Hardness of linear motion shaft : HRC 60 (f_H=1.0)

4. Calculation of expected life

In the conditions where basic dynamic load rating based on 50km travel and the values of other factors are 1.0, it is necessary to determine an appropriate model number that is used to expect life hours. In the above conditions, let's try the model number LM40UU.

$$L = \left(\frac{1.0 \times 1.0 \times 1.0}{1.6} \times \frac{2,150}{250}\right)^3 \times 50 \fallingdotseq 7,764 \text{ km}$$

$$L_h = \frac{7,764 \times 10^3}{2 \times 0.250 \times 60 \times 60} \fallingdotseq 4,313 \text{ hours}$$

In the assumption that life of a linear ball bushing hours are 15,000,
L = 15,000 x 2 x 0.250 x 10^{-3} x 60 x 60 = 27,000km

$$C = \frac{250 \times 1.6}{1.0 \times 1.0 \times 1.0} \times \sqrt[3]{\frac{27,000}{50}} \fallingdotseq 3,257 \text{ N}$$

Accordingly, the linear ball bushing model number that meets the above conditions is determined to be LM50UU, whose basic dynamic load rating is 3,822N

4 Equivalent factor

Table 1. Equivalent factor of LM Series

Model No.	Equivalent factor : K	
	1 ball bushing	2 ball bushings in contact
LM 5	1.253	0.178
LM 6	0.553	0.162
LM 8S	0.708	0.166
LM 8	0.442	0.128
LM 10	0.389	0.101
LM 12	0.389	0.097
LM 13	0.343	0.093
LM 16	0.279	0.084
LM 20	0.257	0.071
LM 25	0.163	0.054
LM 30	0.153	0.049
LM 35	0.143	0.045
LM 40	0.117	0.040
LM 50	0.096	0.032
LM 60	0.093	0.028

Note: The equivalent factor of LMF/K/H and SH Series is equal to that of LM Series.

Table 2. Equivalent factor of LM-L Series

Model No.	Equivalent factor : K
	1 ball bushing
LM 5L	0.223
LM 6L	0.201
LM 8L	0.151
LM 10L	0.118
LM 12L	0.113
LM 13L	0.107
LM 16L	0.096
LM 20L	0.082
LM 25L	0.060
LM 30L	0.053
LM 35L	0.050
LM 40L	0.043
LM 50L	0.034
LM 60L	0.031

Note: The equivalent factor of LMF/K/H-L Series is equal to that of LM-L Series

Table 3. Equivalent factor of LME Series

Model No.	Equivalent factor : K	
	1 ball bushing	2 ball bushings in contact
LME 5	0.669	0.123
LME 8	0.514	0.116
LME 12	0.389	0.090
LME 16	0.343	0.081
LME 20	0.291	0.063
LME 25	0.209	0.052
LME 30	0.167	0.045
LME 40	0.127	0.039
LME 50	0.105	0.031
LME 60	0.093	0.024

Note: The equivalent factor of LMF/K/H and SH Series is equal to that of LM Series.

Application of short stroke

If short stroke is applied, life of a linear ball bushing is shorter than that of a shaft.
If short stroke is applied, the basic dynamic load rating required is in proportion to the length factor (Kc), as shown in Figure 3.

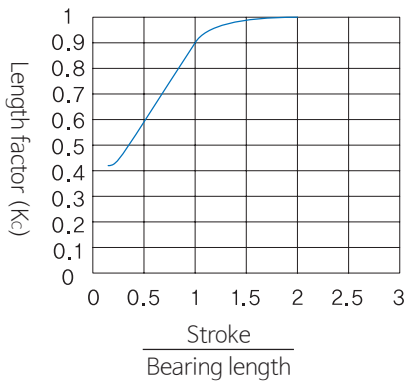

Figure 3. Length factor (KC)

5 Lubrication and Friction

A linear ball bushing is sometimes used in the no-lubrication state. Generally, grease or oil lubric ation is applied.

1. Grease lubrication

A linear ball bushing is coated with rust-prevention oil at the time of initial shipment. Therefore, after the device needs to be washed with clean white oil or an organic solvent, it is required to coat it with grease.
In the case of "..UU" type(seals on the both ends), it is required to coat ball rows of a linear ball bushing with grease before use. In the case of no seal, either apply
the above process, or coat a linear shaft with grease. It is recommended to use lithium grease (JIS2) with good quality.

2. Use of lubricant

If a lubricant is used for lubrication, there is no need of removal the anti-rust oil applied already. It is recommended to use a lubricant whose ISO viscosity is in the range of VG15-100.

Available temperature range	Viscosity
-30℃~50℃	VG 15~46
50℃~80℃	VG 46~100

General lubricants are turbine oil, machine oil, and spline oil. Drop a lubricant on a linear motion shaft, or inject a lubricant in the oil inlet after processing a housing, as shown in Figure 4.
Our company also manufactures a product that has an oil inlet on the outside diameter of a linear ball bushing as customer request. For more information, please contact WON ST.

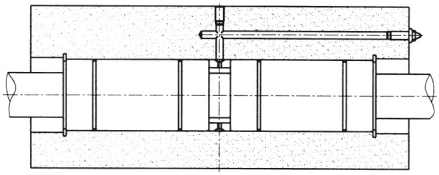

Figure 4.

In the case of a seal type, a seal removes a lubricant. Except for a type of the seal on one side, no oil dropping is applied.

3. Coefficient of friction

A linear ball bushing makes a rolling motion with the use of balls as a rolling element in the rolling surface, so that it has low frictional resistance. In particular, there is greatly less static friction, and almost no dynamic friction. Therefore, the device does not generate any stick sleep, and supports transfer highly precisely.
Generally, a coefficient of friction is shown in Figure 5.
Frictional resistance force can be calculated in the following formula:

$$F = \mu \cdot P + fs$$

F : Frictional force (N)
fs : Seal resistance (1.3 ~ 204 N)
P : Externally applied load (vertical load to the central line of shaft)) (N)
μ : Coefficient of friction (dynamic or static)

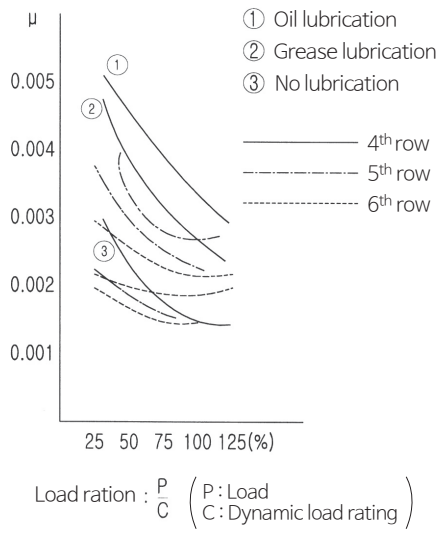

Figure 5. Dynamic friction coefficient of linear ball bushing

6 Assembly

1. Inside diameter of housing

Table 4 presents the recommended tolerance of the inside diameter of the housing in a linear ball bushing. Commonly, a housing fit is a clearance fit. To remove clearance, it is necessary to apply a transition fit.

Table 4. Inside diameter tolerance of housing

Type		Housing	
Model No.	Precision	Clearance fit	Transition fit
LM	High (H)	H7	J7
LME	–	H7	K6, J6
LMF LMK LMH LM–L LMF–L LMK–L LMH–L	–	H7	J7

2. Clearance of outer sleeve and linear motion shaft

If you need to combine a linear ball bushing with a linear motion shaft, it is necessary to apply a running fit generally. To remove clearance, apply precise clearance.

Table 5. Outside diameter tolerance of shaft

Type		LMshaft	
Model No.	Precision	Normal clearance	Precision clearance
LM	High (H)	f6, g6	h6
LME	–	h7	k6
LMF LMK LMH LM–L LMF–L LMK–L LMH–L	–	f6, g6	h6

Note 1. If you need to set clearance to a minus value after mounting, the value should not exceed the tolerance of radial clearance shown in the table of dimensions.

Note 2. In Case Unit SH, SHW, and SHO Series, the tolerance of a shaft should be equivalent to a high level.

3. Mounting of outer sleeve

Mounting the outer sleeve of a linear ball bushing does not require the direction of a linear motion shaft and high precision. Nevertheless, it is required to avoid hammering for fixture.
For the tolerance of inside diameter of a housing, see Table 4.

4. Standard mounting

An example of the mounting of standard-type linear ball bushing is illustrated in Figures 6 and 7. Fix the device with the use of a snap ring, a fixing plate, and so on.

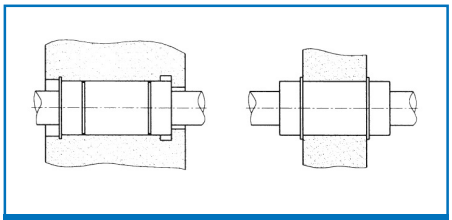

Figure 6. An example of snap ring mounting

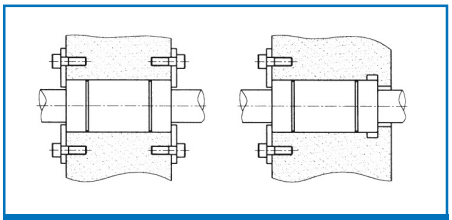

Figure 7. An example of fixing plate

5. Retaining ring for mounting (for reference)

For the retaining ring for fixture in Linear Ball Bushing LM Series, see the following table.

Model No.	Retaining ring			
	For outside diameter (for shaft)		For inside diameter (for bore)	
	C-Type Concentric	C-Type Concentric	C-Type Concentric	C-Type Concentric
LM 5	10	10	10	10
LM 6	12	12	12	12
LM 8	–	15	15	15
LM 8S	–	15	15	15
LM 10	19	19	19	19
LM 12	21	21	21	21
LM 13	23	22	23	–
LM 16	28	–	28	28
LM 20	32	–	32	32
LM 25	40	40	40	40
LM 30	45	45	45	45
LM 35	52	52	52	52
LM 40	–	60	60	60
LM 50	–	80	80	80
LM 60	–	90	90	90

Note: The table is commonly applied to LM and LM-L.

6. Setscrew mounting prohibited

Avoid fixing the outside diameter of the outer sleeve with the use of one setscrew, which causes deformation of the outer sleeve.

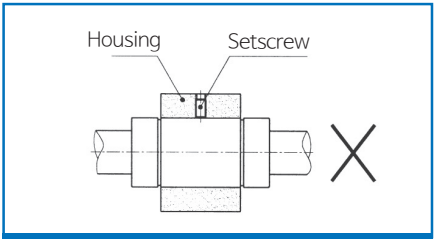

Figure 8. An example of setscrew mounting

7. Flange-type mounting

LMF, LMK, and LMH (including long-type) Series have the integral structure of flange and outer sleeve. Therefore, it is possible to fix only with the flange.
Note: In the case of the mounting based on outer sleeve, pay attention to the shape tolerance in the table of dimensions.

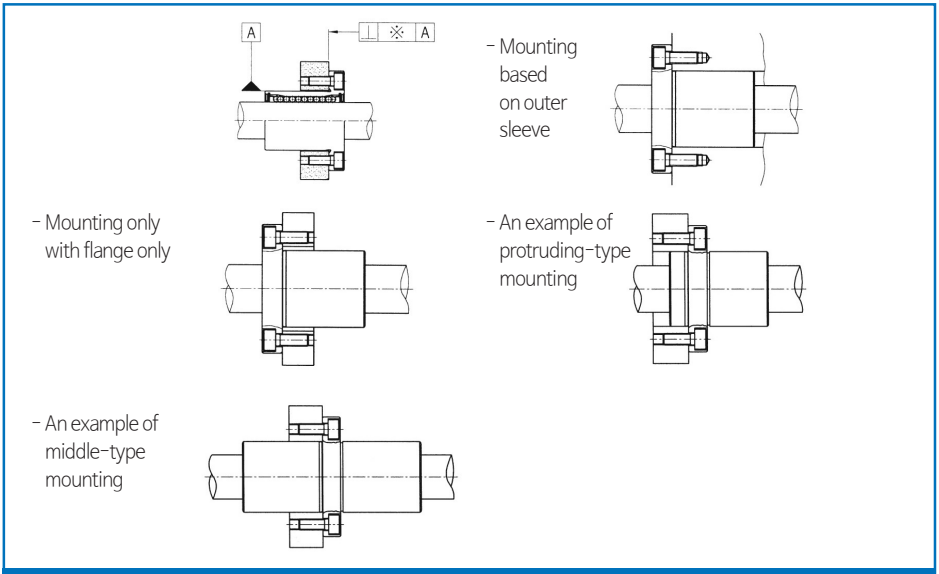

Figure 9. An example of flange-type mounting

8. Adjustable-type mounting

As for the clearance adjustment of the adjustable type (..AJ), it is possible to adjust the clearance of a linear ball bushing and a linear motion shaft easily by using an adjustable housing. At this time, the cutting part of the linear ball bushing is positioned at 90° of the cutting part of the housing, and thus it is possible to apply an even change in the circumferential direction. (See Figure 10.)

9. Open-type mounting

For the open type (..OP), it is also possible to use a clearance adjustable housing. Commonly, light preload is applied. Please be careful not to apply excessive preload.

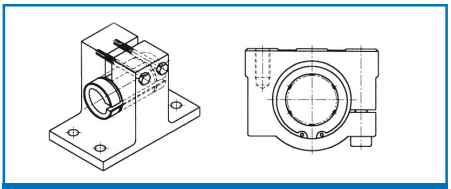

Figure 10. An example of adjustable clearance type mounting

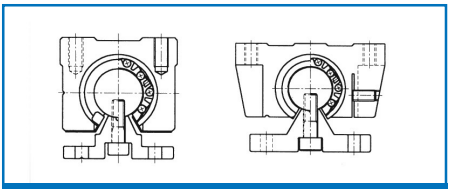

Figure 11. An example of open type mounting

10. Shaft support mounting

In Shaft Support WK Series, it is possible to fix a device to a table easily with a mounting bolt. With a jointing bolt, it is possible to install a linear motion shaft firmly.

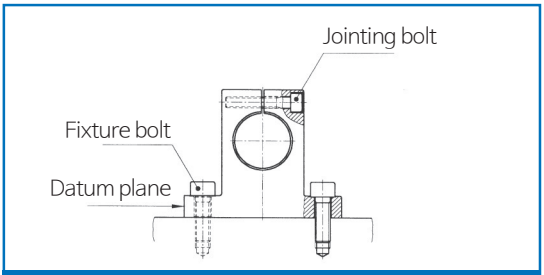

Figure 12. An example of shaft support mounting

7 Caution for Use

1. Assembly of outer sleeve

To combine a standard-type linear ball bushing to a housing, use either a jig for even hitting and insertion in order to prevent a side plate or seal from being hit directly, or a bed plate for light indentation. (See Figure 14.)

2. Insertion of linear motion shaft

In case of the insertion of a linear motion shaft, if the linear motion shaft tilts, a ball can fall, or a retainer has deformation. Therefore, slowly assemble after setting the center rightly. (See Figure 15.)

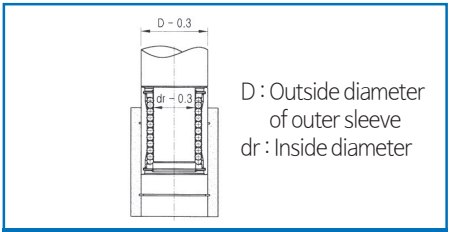

Figure 14. An example of housing fitting

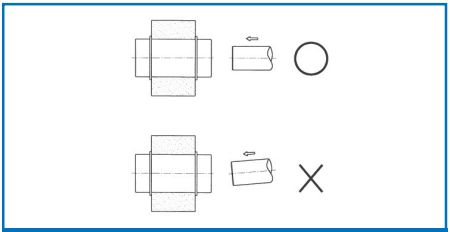

Figure 15. An example of LM shaft fitting

3. When moment load applied

As for a linear ball bushing, it is required to apply even load to the entire length of rolling surface of a ball.
In particular, if moment is applied, it is required to use more than two linear ball bushings for one linear motion shaft, and to set the mounting distance between linear ball bushings as long as possible.
If moment load works, it is required to calculate equivalent radial load and check a model number.
(See Tables 1, 2, and 3).

4. Avoid rotation motion

A linear ball bushing is not suitable for rotary motion in terms of its structure. (See Figure 16.) If it rotates by force, ball creeping can cause wear and retainer damage. Be careful.

5. Caution for mounting open-type linear ball bushing with three ball rows

To install an open-type three-ball-row linear ball bushing, it is required to consider load distribution. It is recommended to install the device as shown in Figure 17.

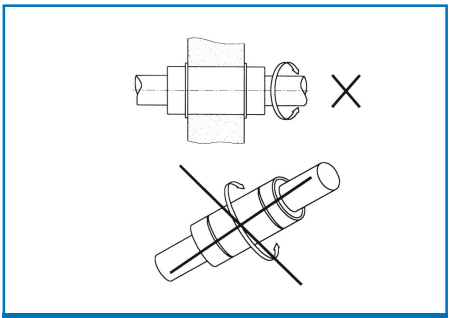

Figure 16. An example of motion direction

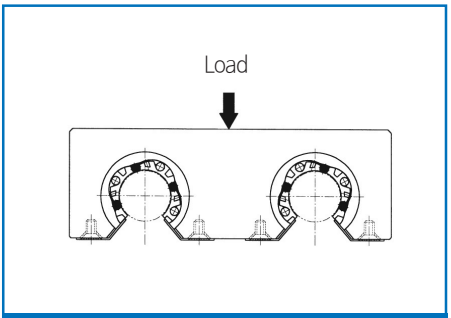

Figure 17. An example of LM12 & LM13 mounting

LM Series

LM　　LM□OP　　LM□AJ

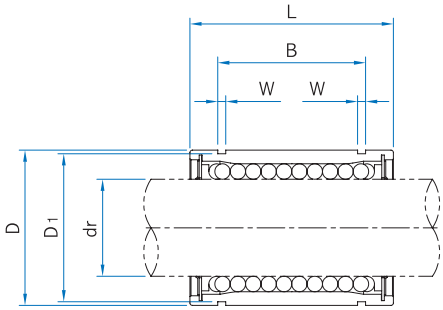

Unit : mm

LM Series						Basic load rating		Inside diameter	
Cylindrical Type		Open type(OP)		Adjustable type(AJ)					
Model No.	No. of ball rows	Model No.	No. of ball rows	Model No.	No. of ball rows	Dynamic C(N)	Static Co(N)	dr (mm)	Toler-ance (μm)
LM4UU	4	-	-	-	-	88	127	4	0 -8
LM5UU	4	-	-	-	-	167	206	5	0 -8
LM6UU	4	-	-	LM 6UUAJ	4	206	265	6	0 -9
LM8SUU	4	-	-	LM8SUUAJ	4	176	216	8	
LM8UU	4	-	-	LM 8UUAJ	4	274	392	8	
LM10UU	4	-	-	LM10UUAJ	4	372	549	10	
LM12UU	4	LM12UUOP	3	LM12UUAJ	4	510	784	12	
LM13UU	4	LM13UUOP	3	LM13UUAJ	4	510	784	13	
LM16UU	5	LM16UUOP	4	LM16UUAJ	5	774	1180	16	
LM20UU	5	LM20UUOP	4	LM20UUAJ	5	882	1370	20	0 -10
LM25UU	6	LM25UUOP	5	LM25UUAJ	6	980	1570	25	
LM30UU	6	LM30UUOP	5	LM30UUAJ	6	1570	2740	30	
LM35UU	6	LM35UUOP	5	LM35UUAJ	6	2160	3140	35	0 -12
LM40UU	6	LM40UUOP	5	LM40UUAJ	6	3820	4020	40	
LM50UU	6	LM50UUOP	5	LM50UUAJ	6	3820	7940	50	
LM60UU	6	LM60UUOP	5	LM60UUAJ	6	4700	10000	60	0 -15

Note: As for surface treatment, plating or Raydent treatment is applicable.

1N ≒ 0.102kgf

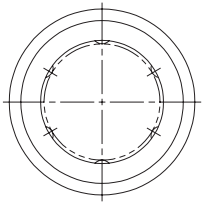

LM

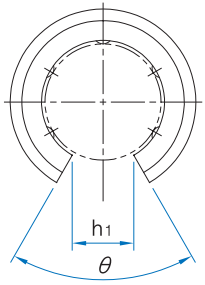

LM□OP

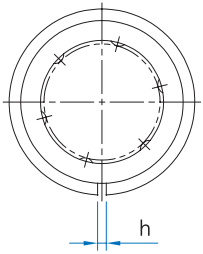

LM□AJ

Unit : mm

Dimensions (mm)											Wgt※ (g)	Tolerance of radial direction clearance (μm)	Model No.
D		L		B									
(mm)	Tolerance (μm)	(mm)	Tolerance (μm)	(mm)	Tolerance (μm)	W	D1	h	h1	θ(°)			
8	0 -9	12	0 -0.12	-	-	-	-	-	-	-	2	-3	LM4UU
10		15		10.2	0 -0.2	1.1	9.6	-	-	-	4		LM5UU
12	0 -11	19	0 -0.2	13.5		1.1	11.5	1	-	-	8.5		LM6UU
15		17		11.5		1.1	14.3	1	-	-	11		LM8SUU
15		24		17.5		1.1	14.3	1	-	-	17		LM8UU
19	0 -13	29		22		1.3	18	1	6.8	80°	36	-4	LM10UU
21		30		23		1.3	20	1.5	8	80°	42		LM12UU
23		32		23		1.3	22	1.5	9	80°	49		LM13UU
28		37		26.5		1.6	27	1.5	11	80°	76	-6	LM16UU
32	0 -16	42		30.5		1.6	30.5	1.5	11	60°	100		LM20UU
40		59	0 -0.3	41	0 -0.4	1.85	38	2	12	50°	240		LM25UU
45		64		44.5		1.85	43	2.5	15	50°	270	-8	LM30UU
52	0 -19	70		49.5		2.1	49	2.5	17	50°	425		LM35UU
60		80		60.5		2.1	57	3	20	50°	654	-10	LM40UU
80		100		74		2.6	76.5	3	25	50°	1700	-13	LM50UU
90	0 -22	110		85		3.15	86.5	3	30	50°	2000		LM60UU

※ Based on cylindrical type

1N ≒ 0.102kgf

LME Series

LME　　LME□OP　　LME□AJ

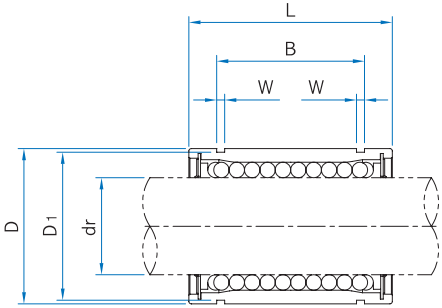

Unit : mm

LME Series						Basic load rating		Inside diameter	
Cylindrical Type		Open type (OP)		Adjustable clearance type (AJ)		Dyn C (N)	Stat. Co (N)		
Model No.	No. of ball rows	Model No.	No. of ball rows	Model No.	No. of ball rows			dr (mm)	Toler-ance (μm)
LME5UU	4	-	-	LME5UUAJ	4	206	265	5	+8 0
LME8UU	4	-	-	LME8UUAJ	4	265	402	8	
LME12UU	4	LME12UUOP	3	LME12UUAJ	4	510	784	12	
LME16UU	5	LME16UUOP	4	LME16UUAJ	5	578	892	16	+9 -1
LME20UU	5	LME20UUOP	4	LME20UUAJ	5	862	1370	20	
LME25UU	6	LME25UUOP	5	LME25UUAJ	6	980	1570	25	+11 -1
LME30UU	6	LME30UUOP	5	LME30UUAJ	6	1570	2740	30	
LME40UU	6	LME40UUOP	5	LME40UUAJ	6	2160	4020	40	+13 -2
LME50UU	6	LME50UUOP	5	LME50UUAJ	6	3820	7940	50	
LME60UU	6	LME60UUOP	5	LME60UUAJ	6	4700	9800	60	

Note: As for surface treatment, plating or Raydent treatment is applicable.　　1N ≒ 0.102kgf

- Reference to basic dynamic load rating
  Basic dynamic load rating is based on the 50km stroke.
  In the case of 100km as a base, it is necessary to divide the C value in the table by 1.26.

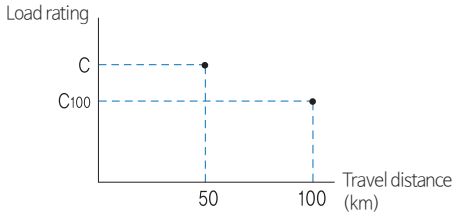

E.g.　LME 20　　C : 860 N　　C_{100} : 682 N

$L = \left(\frac{C}{P}\right)^3 \times 50\ km,\ L = \left(\frac{C_{100}}{P}\right)^3 \times 100\ km,$

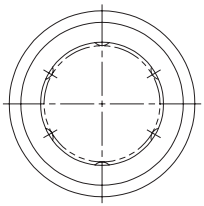

LME

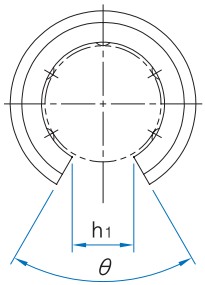

LME□OP

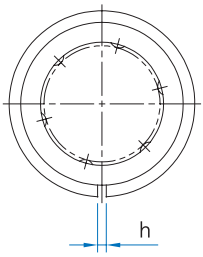

LME□AJ

Unit : mm

Dimensions (mm)											Wgt※ (g)	Tolerance of radial direction clearance (μm)	Part No.
D		L		B		W	D_1	h	h_1	θ (°)			
(mm)	Tol. (μm)	(mm)	Tol. (mm)	(mm)	Tol. (mm)								
12	0 −8	22	0 −0.2	14.5	0 −0.3	1.1	11.5	1	–	–	11	−3	LME5UU
16		25		16.5		1.1	15.2	1	–	–	22		LME8UU
22	0 −9	32		22.9		1.3	21	1.5	7.5	78°	45	−4	LME12UU
26		36		24.9		1.3	24.9	1.5	10	78°	60		LME16UU
32	0 −11	45		31.5		1.6	30.3	2	10	60°	102	−6	LME20UU
40		58	0 −0.3	44.1	0 −0.4	1.85	37.5	2	12.5	60°	235		LME25UU
47		68		52.1		1.85	44.5	2	12.5	50°	360	−8	LME30UU
62	0 −13	80		60.6		2.15	59	3	16.8	50°	770		LME40UU
75		100		77.6		2.65	72	3	21	50°	1250	−13	LME50UU
90	0 −15	125	0 −0.4	101.7		3.15	86.5	3	27.2	54°	2220		LME60UU

※ based on cylindrical flange type

1N ≒ 0.102kgf

Note: As for surface treatment, plating or Raydent treatment is applicable.
※ Based on cylindrical flange type

LMF/K/H Series

Flange Type

LMF LMK LMH

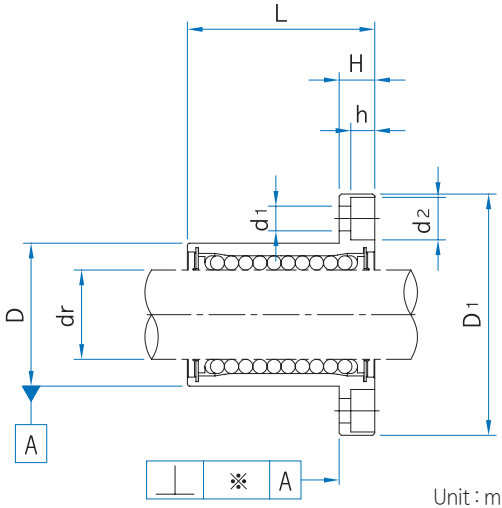

Unit : mm

Model No.			No. of ball rows	Weight※ (g)	Tolerance of radial direction clearance (μm)	Basic load rating		Inside diameter	
Round type	Square type	Oval type				Dynamic C(N)	Static C0 (N)	dr (mm)	Toler-ance (μm)
LMF6UU	LMK6UU	-	4	24	-3	206	265	6	0 -9
LMF8UU	LMK8UU	-	4	37		274	392	8	
LMF10UU	LMK10UU	LMH10UU	4	72	-4	372	549	10	
LMF12UU	LMK12UU	LMH12UU	4	76		510	784	12	
LMF13UU	LMK13UU	LMH13UU	4	88		510	784	13	
LMF16UU	LMK16UU	LMH16UU	5	120	-6	774	1180	16	
LMF20UU	LMK20UU	LMH20UU	5	180		882	1370	20	0 -10
LMF25UU	LMK25UU	LMH25UU	6	340		980	1570	25	
LMF30UU	LMK30UU	LMH30UU	6	470	-8	1570	2740	30	
LMF35UU	LMK35UU	-	6	650		1670	3140	35	0 -12
LMF40UU	LMK40UU	-	6	1060	-10	2160	4020	40	
LMF50UU	LMK50UU	-	6	2200	-13	3820	7940	50	
LMF60UU	LMK60UU	-	6	3000		4700	10000	60	0 -15

Note: As for surface treatment, plating or Raydent treatment is applicable.
※ Based on cylindrical flange type

1N ≒ 0.102kgf

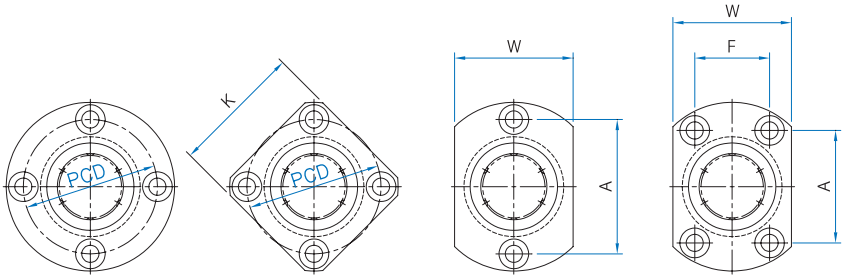

LMF LMK LMH

Unit : mm

Main dimensions (mm)													Model No.
Outside diameter(D)		Length(L)		D1	H	PCD	K	W	A	F	※	d1xd2xh	
(mm)	Tol. (μm)	(mm)	Tol. (mm)	(mm)							(μm)		
12	0 -11	19	0 -0.2	28	5	20	22	18	20	-	12	3.5x6x3.1	LMF/K/H6UU
15		24		32	5	24	25	21	24	-	12		LMF/K/H8UU
19	0 -13	29		40	6	29	30	25	29	-	12	4.5x7.5x4.1	LMF/K/H10UU
21		30		42	6	32	32	27	32	-	12		LMF/K/H12UU
23		32		43	6	33	34	29	33	-	12		LMF/K/H13UU
28		37		48	6	38	37	34	31	22	12		LMF/K/H16UU
32	0 -16	42		54	8	43	42	38	36	24	15	5.5x9x5.1	LMF/K/H20UU
40		59	0 -0.3	62	8	51	50	46	40	32	15		LMF/K/H25UU
45		64		74	10	60	58	51	49	35	15	6.6x11x6.1	LMF/K/H30UU
52	0 -19	70		82	10	67	64	-	-	-	20		LMF/K/H35UU
60		80		96	13	78	75	-	-	-	20	9x14x8.1	LMF/K/H40UU
80		100		116	13	98	92	-	-	-	20		LMF/K/H50UU
90	0 -22	110		134	18	112	106	-	-	-	25	11x17x11.1	LMF/K/H60UU

1N ≒ 0.102kgf

LMF/K□L Series

Flange Type

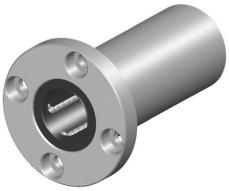

LMF□L

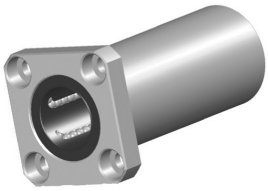

LMK□L

Unit : mm

Model No.		No. of ball rows	Weight※ (g)	Tolerance of radial direction clearance (μm)	Basic load rating		Inside diameter	
Round type	Square type				Dynamic load rating C(N)	Static load rating C_0 (N)	dr (mm)	Tolerance (μm)
LMF6LUU	LMK6LUU	4	31	-3	323	529	6	0 -10
LMF8LUU	LMK8LUU	4	51		431	784	8	
LMF10LUU	LMK10LUU	4	98	-4	588	1100	10	
LMF12LUU	LMK12LUU	4	110		813	1570	12	
LMF13LUU	LMK13LUU	4	130		813	1570	13	
LMF16LUU	LMK16LUU	5	190	-6	1230	2350	16	
LMF20LUU	LMK20LUU	5	260		1400	2740	20	0 -12
LMF25LUU	LMK25LUU	6	540		1560	3140	25	
LMF30LUU	LMK30LUU	6	680	-8	2490	5490	30	
LMF35LUU	LMK35LUU	6	1020		2650	6270	35	0 -15
LMF40LUU	LMK40LUU	6	1570	-10	3430	8040	40	
LMF50LUU	LMK50LUU	6	3600	-13	6080	15900	50	
LMF60LUU	LMK60LUU	6	4500		7550	20000	60	0 -20

1N ≒ 0.102kgf

Note: As for surface treatment, plating or Raydent treatment is applicable.
※ Based on cylindrical flange type

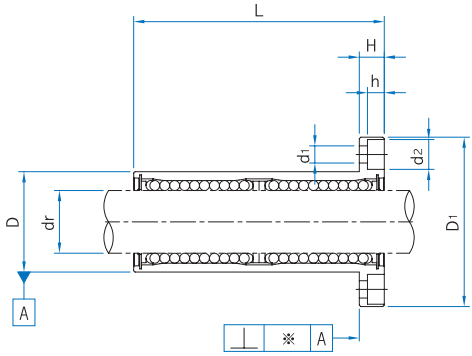

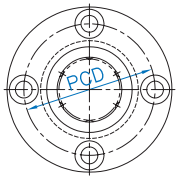

LMF□L

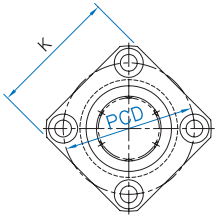

LMK□L

Unit : mm

Main dimensions (mm)										Model No.
Outside diameter (D)		Length (L)		D1	H	PCD	K	Square-ness ※ (㎛)	d1 x d2 x h	
(mm)	Tol. (㎛)	(mm)	Tol. (mm)	(mm)						
12	0 -13	35	0 -0.3	28	5	20	22	15	3.5x6x3.1	LMF/K6LUU
15		45		32	5	24	25	15		LMF/K8LUU
19	0 -16	55		40	6	29	30	15	4.5x7.5x4.1	LMF/K10LUU
21		57		42	6	32	32	15		LMF/K12LUU
23		61		43	6	33	34	15		LMF/K13LUU
28		70		48	6	38	37	15		LMF/K16LUU
32	0 -16	80		54	8	43	42	20	5.5x9x5.1	LMF/K20LUU
40		112	0 -0.4	62	8	51	50	20		LMF/K25LUU
45		123		74	10	60	58	20	6.6x11x6.1	LMF/K30LUU
52	0 -19	135		82	10	67	64	25		LMF/K35LUU
60		154		96	13	78	75	25	9x14x8.1	LMF/K40LUU
80		192		116	13	98	92	25		LMF/K50LUU
90	0 -22	211		134	18	112	106	25	11x17x11.1	LMF/K60LUU

1N ≒ 0.102kgf

LM□L / LME□L Series

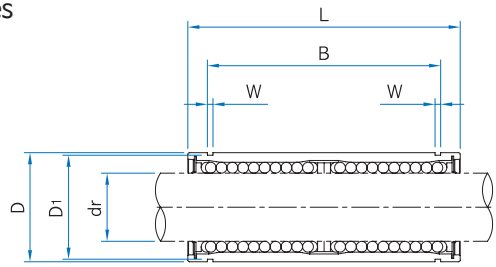

LM/E□L

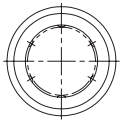

Unit : mm

LM□L Series		Inside diameter		Main dimensions (mm)								Wgt※ (g)	Basic load rating	
Model No.	No. of ball rows	dr (mm)	Tol. (μm)	D (mm)	D Tol. (μm)	L (mm)	L Tol. (mm)	B (mm)	B Tol. (mm)	W	D1		Dynamic C(N)	Static C0(N)
LM6LUU	4	6	0 −10	12	0 −13	35	0 −0.3	27	0 −0.4	1.1	11.5	16	323	530
LM8LUU	4	8		15		45		35		1.1	14.3	31	431	784
LM10LUU	4	10		19	0 −16	55		44		1.3	18	62	588	1100
LM12LUU	4	12		21		57		46		1.3	20	80	813	1570
LM13LUU	4	13		23		61		46		1.3	22	90	813	1570
LM16LUU	5	16		28		70		53		1.6	27	145	1230	2350
LM20LUU	5	20	0 −12	32	0 −19	80		61		1.6	30.5	180	1400	2740
LM25LUU	6	25		40		112	0 −0.4	82	0 −0.5	1.85	38	440	1560	3140
LM30LUU	6	30		45		123		89		1.85	43	480	2490	5490
LM35LUU	6	35	0 −15	52	0 −22	135		99		2.1	49	795	2650	6270
LM40LUU	6	40		60		151		121		2.1	57	1170	3430	8040
LM50LUU	6	50		80		192		148		2.6	76.5	3100	6080	15900
LM60LUU	6	60	0 −20	90	0 −25	209		170		3.15	86.5	3500	7550	20000
LME□L Series														
LME8LUU	4	8	+9 −1	16	0/−9	46	0 −0.3	33	0 −0.4	1.1	15.2	40	421	804
LME12LUU	4	12		22	0 −11	61		45.8		1.3	21	80	813	1570
LME16LUU	5	16	+11 −1	26		68		49.8		1.3	24.9	115	921	1780
LME20LUU	5	20		32	0 −13	80		61		1.6	30.5	180	1370	2740
LME25LUU	6	25	+13 −2	40		112	0 −0.4	82	0 −0.5	1.85	38	430	1570	3140
LME30LUU	6	30		47		123		104.2		1.85	44.5	615	2500	5490
LME40LUU	6	40	+16 −4	62	0 −15	151		121.2		2.15	59	1400	3430	8040
LME50LUU	6	50		75		192		155.2		2.65	72	2320	6080	15900
LME60LUU	6	60		90	0/−20	209		170		3.15	86.5	3900	7550	20000

Note: As for surface treatment, plating or Raydent treatment is applicable.

1N ≒ 0.102kgf

SC Series

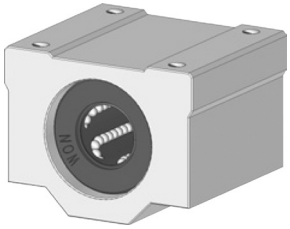

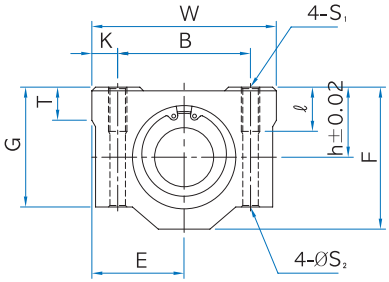

Unit : mm

Model No.	Weight (g)	Main dimensions							Mounting dimensions					Di-ameter of shaft d	No. of ball rows	Basic load rating	
		h	E	W	L	F	G	T	B	C	K	ℓ	S2			Dy-namic C (N)	Static C0 (N)
SC8UU	52	11	17	34	30	22	18	6	24	18	5	8	3.4	8	4	260	400
SC10UU	92	13	20	40	35	26	22	8	28	21	6	12	4.3	10	4	370	540
SC12UU	102	15	21	42	36	29	25	8	30.5	26	5.75	12	4.3	12	4	410	490
SC13UU	123	15	22	44	39	30	26	8	33	26	5.5	12	4.3	13	4	500	770
SC16UU	189	19	25	50	44	38.5	35	9	36	34	7	12	4.3	16	5	770	1170
SC20UU	237	21	27	54	50	41	36	11	40	40	7	12	5.2	20	5	860	1370
SC25UU	555	26	38	76	67	51.5	41	12	54	50	11	18	7	25	6	980	1560
SC30UU	685	30	39	78	72	59.5	49	15	58	58	10	18	7	30	6	1560	2740
SC35UU	1100	34	45	90	80	68	54	18	70	60	10	18	7	35	6	1660	3130
SC40UU	1600	40	51	102	90	78	62	20	80	60	11	25	8.7	40	6	2150	4010
SC50UU	3350	52	61	122	110	102	80	24	100	80	11	25	8.7	50	6	3820	7930

1N ≒0.102kgf

Note: 1) LM □□UU jointed.
2) SH□□UU marked in the side of the product.

SCWN Series

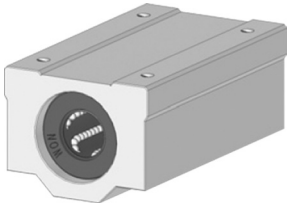

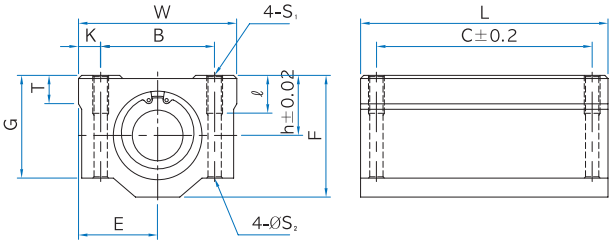

Unit : mm

Model No.	Main dimensions							Mounting dimensions					Diameter of shaft d	No. of ball rows	Basic load rating	
	h	E	W	L	F	G	T	B	C	K	ℓ	S2			Dynamic C (N)	Static C0 (N)
SCWN 10UU	13	20	40	68	26	22	8	28	46	6	12	4.3	10	4	588	1100
SCWN 12UU	15	21	42	70	29	25	8	30.5	50	5.75	12	4.3	12	4	813	1570
SCWN 13UU	15	22	44	75	30	26	8	33	50	5.5	12	4.3	13	4	813	1570
SCWN 16UU	19	25	50	85	38.5	35	9	36	60	7	12	4.3	16	5	1230	2350
SCWN 20UU	21	27	54	96	41	36	11	40	70	7	12	5.2	20	5	1400	2740
SCWN 25UU	26	38	76	130	51.5	41	12	54	100	11	18	7	25	6	1560	3140
SCWN 30UU	30	39	78	140	59.5	49	15	58	110	10	18	7	30	6	2490	5490
SCWN 35UU	34	45	90	155	68	54	18	70	120	10	18	7	35	6	2650	6270
SCWN 40UU	40	51	102	175	78	62	20	80	140	11	25	8.7	40	6	3430	8040
SCWN 50UU	50	61	122	215	102	80	24	100	160	11	25	8.7	50	6	6080	15900

1N ≒0.102kgf

Note: 1) LM □□UU 2EA jointed
2) SHW□□UU marked in the side of the product

LM Shaft
Contents

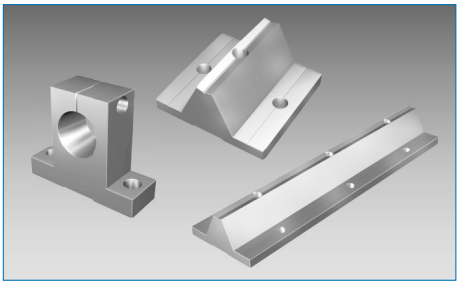

1 Linear Motion Shaft

1. Types

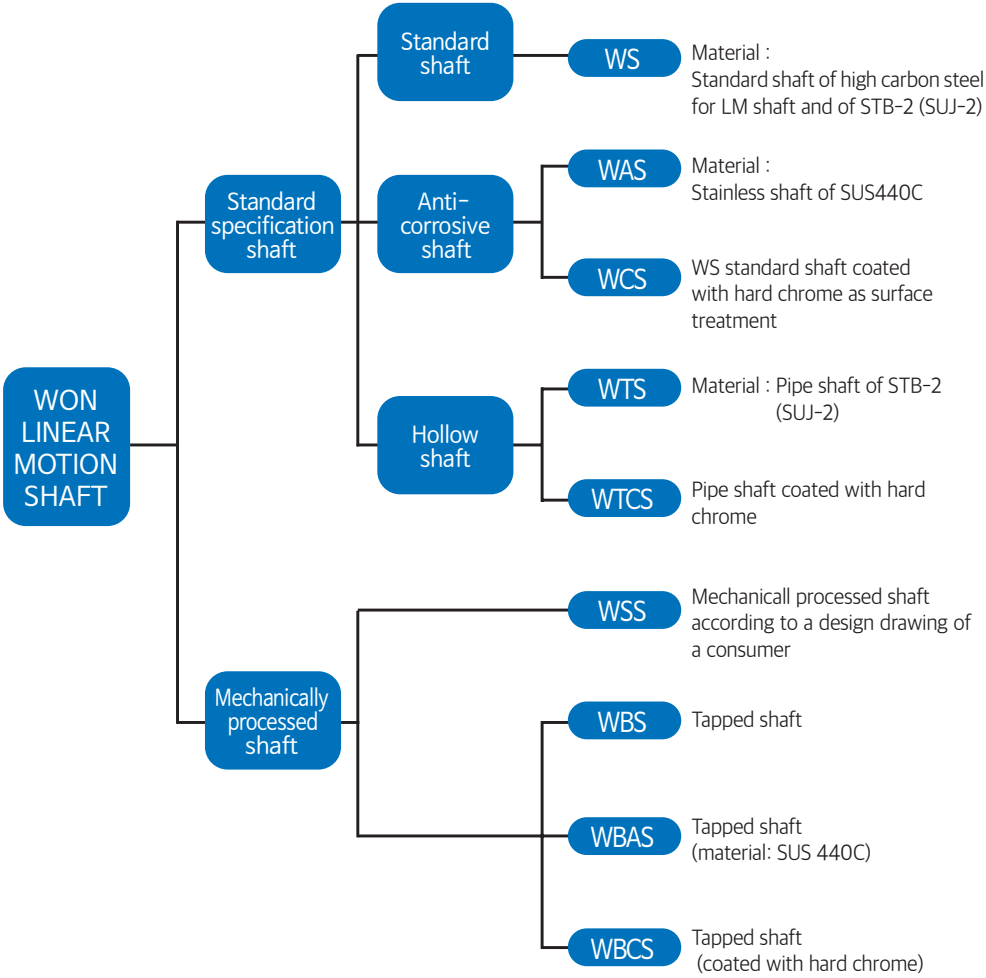

WON Linear Motion Shaft for Ball Bushing guides a ball bushing in order to obtain the linear motion with high precision.
A linear motion shaft is used in combination with a ball bushing that has a linear motion. Therefore, the shaft not only guides the ball bushing, but serves as the inner ring of a bearing. The quality of a shaft greatly affects the function of linear motion system as well as a ball bushing.
WON ST selects materials and applies heat treatment, polishing, and mechanical processing in consideration of such a fact, and guarantees the function of WON Linear Motion Shaft through its long-accumulated technologies

2. Materials

- High carbon steel for linear motion shaft (WON ST standard material)
- High carbon chrome bearing steel (KS: STB-2, JIS: SUJ-2)
- Martensitic stainless steel (SUS440C)
  Generally, High carbon chrome bearing steel (STB-2) is used. If corrosive resistance or no lubrication (e.g., chemical & food product machine, medical equipment, semiconductor equipment) is needed, SUS440C is mostly applied.
- Other materials (not for ball bushing)
  -S45C -SUS 303 -SUS 304 -SUS 316

2 Heat Treatment

The linear motion shaft heat treatment equipment of WON ST is capable of performing heat treatment with accurate and stable high frequency. Based on the material screened without decarbonized layer, scratches, and cracks, high-frequency heat treatment is applied appropriately depending on a size of a shaft. Tempering is applied to make hardness and the depth of hardened layer uniform according to the length direction and circumferential direction of a shaft.

- Surface hardness

STB-2	over HRC58
SUS440C	HRC56 with over ø 16mm
	HRC54 with below ø 13mm

Hardness distribution curve ▶
(ø20)

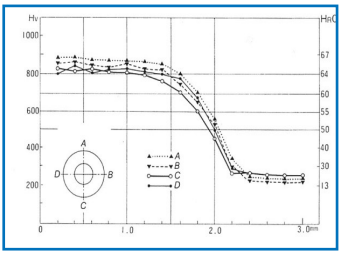

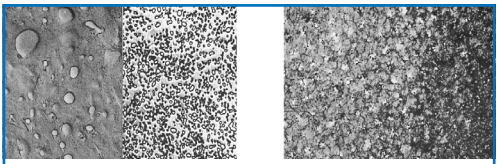

Spheroidized tissue

Cross section of heat treatment with high frequency

Figure 1. Photo of tissue

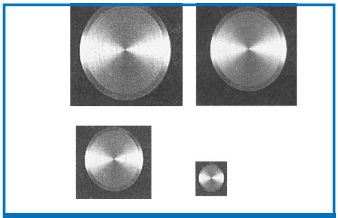

Figure 2. Photo of hardened layer

3 Precision

Tolerance of outside diameter	Surface roughness	Straightness
g6, h6, and h5 shafts are mainly manufactured.	1.5 μm Rmax or less	20μm / 300mm or less

4 Calculation of the bending angle of shaft

Support method	Service conditions	Formula to calculate a bending angle	Formula to calculate a bending angle
Fixture of both ends	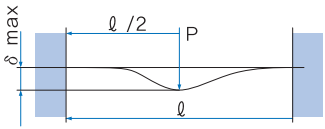	$\delta\max = \frac{P\ell^3}{192EI} = \frac{1}{4} \times P\ell^3 C$	$i_1 = 0$ $i_2 = 0$
Fixture of both ends	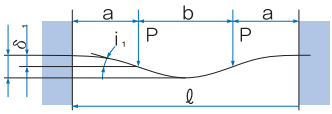	$\delta_1 = \frac{Pa^3}{6EI}(2 - \frac{3a}{\ell}) = 8Pa^3(2\frac{3a}{\ell})C$ $\delta\max = \frac{Pa^3}{24EI}(2+\frac{3b}{a}) = 2Pa^3(2+\frac{3b}{a})C$	$i_1 = \frac{Pa^2b}{2EI\cdot\ell} = \frac{24Pa^2bc}{\ell}$ $i_2 = 0$
Fixture of one end	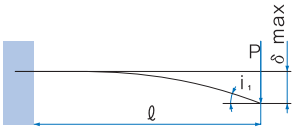	$\delta\max = \frac{P\ell^3}{3EI} = 16P\ell^3C$	$i_1 = \frac{P\ell^2}{2EI} = 24P\ell^2c$ $i_2 = 0$

δ_1 : A bending angle at load point (mm)
i_2 : A load angle at support point
I : 2nd moment of cross section (mm^4)
a, b : Distance between load points
P : Intensive load (N)
$\delta\max$: Max. bending angle (mm)
E : Modulus of elasticity 2.06^5X10N/mm^2
i_1 : A bending angle at load point
ℓ : Length (mm)
C : 1/48EI(1/kgf · mm)^2

1. Solid shaft

2nd moment of cross section $(I) = \frac{\pi D^4}{64}$ (㎜⁴)

D = Outside diameter (㎜)

The 2nd moment of the cross section of a shaft and the value of C (=1/48EI) are presented below.

Outside diameter	2nd moment of cross section I (㎜⁴)	C=1/48EI (1/N·㎟)
3	3.98	2.49×10^{-8}
4	1.26×10	7.87×10^{-9}
5	3.07×10	3.23×10^{-9}
6	6.36×10	1.56×10^{-9}
8	2.01×10^{2}	4.94×10^{-10}
10	4.91×10^{2}	2.02×10^{-10}
12	1.02×10^{3}	9.73×10^{-11}
13	1.40×10^{3}	7.09×10^{-11}
15	2.49×10^{3}	3.98×10^{-11}
16	3.22×10^{3}	3.08×10^{-11}
20	7.85×10^{3}	1.26×10^{-11}
25	1.92×10^{4}	5.17×10^{-12}
30	3.98×10^{4}	2.49×10^{-13}
35	7.37×10^{4}	1.35×10^{-13}
40	1.26×10^{5}	7.87×10^{-13}
50	3.07×10^{5}	3.23×10^{-13}
60	6.36×10^{5}	1.56×10^{-13}
80	2.01×10^{6}	4.94×10^{-14}
100	4.91×10^{6}	2.02×10^{-14}
120	1.02×10^{7}	9.73×10^{-15}
150	2.49×10^{7}	3.98×10^{-15}

● An example of calculation

-In the conditions where the outside diameter is 2.5mm, the length of a shaft is 430mm, and the intensive load on the center of the shaft is 784N, the maximum bending value is calculated as follows: (In this case, ignore empty weight of a shaft.)

if) If both ends are fixed, substitute P=784 (N), ℓ=430 (㎜), and C=5.17 x 10 (1/kgf · ㎟) (the value of the outside diameter 25mm in the above table) in the formula of bending.

$$\delta max = \frac{1}{4} P\ell^3 C = 0.08 \text{ (㎜)}$$

2. Hollow shaft

2nd moment of cross section $(I) = \frac{\pi}{64} \times (d_2^4 - d_1^4)$ (㎜⁴)

d_2 = Outside diameter (㎜), d_1 = Inside diameter (㎜)

Outside diameter d2(㎜)	Inside diameter d1(㎜)	2nd moment of cross section I (㎜⁴)	C=1 / 48EI (1/N · ㎟)
10	4	4.78×10^{2}	2.08×10^{-10}
13	6	1.34×10^{3}	7.40×10^{-11}
16	8	3.01×10^{3}	3.30×10^{-11}
20	14	5.97×10^{3}	1.66×10^{-11}
25	16	1.60×10^{4}	6.20×10^{-12}
30	17	3.57×10^{4}	2.78×10^{-12}
35	19	6.73×10^{4}	1.47×10^{-12}
40	20	1.18×10^{5}	8.41×10^{-13}
50	25	2.88×10^{5}	3.44×10^{-13}
60	30	5.96×10^{5}	1.66×10^{-13}
80	40	1.88×10^{6}	5.28×10^{-14}
100	50	4.60×10^{6}	2.16×10^{-14}

● An example of calculation

-In the conditions where the outside diameter is 50mm, the inside diameter is 25mm, the length of a hollow shaft is 1800mm, and the intensive load on the center of the shaft is 784N, the maximum bending value based on an empty weight is calculated as follows: (See the next page.)

if) If both ends are fixed,
substitute P=100, ℓ=1800 (㎜),
and C = 3.44 x 10^{-13} (1/N . mm^2)
(in the table) in the formula of bending.

$$\delta\ max = \frac{1}{4} P\ell^3 C = 0.05\ (mm)$$

5 Composition of model name & number

1. Model number format I (solid shaft)

WS – D 16 h6 x 2000

① ② ③ ④ ⑤

① Symbol of shaft model number

Solid shaft	WS	This model is the ball bushing shaft most used. · Material: high carbon steel for linear motion shaft (S55C), STB-2(SUJ-2)
	WAS	This model as a shaft for ball bushing is excellent at corrosive resistance, and is suitable for an environment with easy corrosion, an oxidative environment with no use of lubricants, and cleanroom. · Material: SUS440C
	WCS	The surface of this model is treated with hard chrome plating. It is suitable and economic for an easy-to-rust environment or poor environment. · Material: high carbon steel for linear motion shaft (S55C), STB-2(SUJ-2)

② Symbol of mechanical processing (No description means a standard product or a simple cut product.)

D	Processed in reference to a drawing

③ Outside diameter (㎜), ④ Allowable tolerance of outside diameter (㎛), ⑤ Length (㎜)

Outside diameter (㎜)	Allowable tolerance of outside diameter (μm)			Standard length in stock L (mm)						
	g6	h5	h6	300	500	1000	1200	1500	2000	3000
3	−2 ~ −8	0 ~ −4	0 ~ −6							
4	−4 ~ −12	0 ~ −5	0 ~ −8							
5										
6										
8	−5 ~ −14	0 ~ −6	0 ~ −9							
10										
12	−6 ~ −17	0 ~ −8	0 ~ −11							
13										
16										
20	−7 ~ −20	0 ~ −9	0 ~ −13							
25										
30										
35	−9 ~ −25	0 ~ −11	0 ~ −16							
40										
50										
60	−10 ~ −29	0 ~ −13	0 ~ −19							
80										

Note 1. For any question about the maximum length, please contact us.
2. The available maximum dimension of outside diameter is ø300.

2. Model number format II (Hollow shaft)

WTS	–	D	20	h6	14	–	2000
①		②	③	④	⑤		⑥

① Symbol of shaft model number

hollow shaft	WTS	This model helps to make equipment and machine lightweight, and to lessen greatly inertial force if a shaft has a linear motion. In addition, an internal bore can be used for wiring or piping. · Material: high carbon steel for linear motion shaft (S55C), STB-2(SUJ-2)
	WTCS	This model is the ball bushing shaft plated with hard chrome in order to prevent corrosion in the outside diameter. · Material: high carbon steel for linear motion shaft (S55C), STB-2(SUJ-2)
	WTAS	This model is the stainless shaft with a bore. It has the advantages of both WAS and WTS. · Material: SUS440C

② Symbol of mechanical processing (No description means a standard product or a simple cut product.)

D	Processed in reference to a drawing

③ Outside diameter (㎜), ④ Allowable tolerance of outside diameter (㎛), ⑤ Inside diameter (㎜), ⑥ Length (㎜)

Outside diameter (㎜)	Inside diameter (㎜)	Allowable tolerance of outside diameter (㎛)			Standard length in stock L (mm)
		g6	h5	h6	
10	4	-5~-14	0~-6	0~-9	1000, 1200, 1500, 2000, 3000
12	6	-6~-17	0~8	0~-11	
16	8				
20	14	-7~-20	0~-9	0~-13	
25	16				
30	17				
35	19	-9~-25	0~-11	0~-16	
40	20				
50	25				

Note : Hollow shafts with different specifications can be manufactured.

3. Model number format Ⅲ (Tapped shaft)

WBS – 16 h6 × 2000 – M5 × 200 – 100

① ② ③ ④ ⑤ ⑥ ⑦

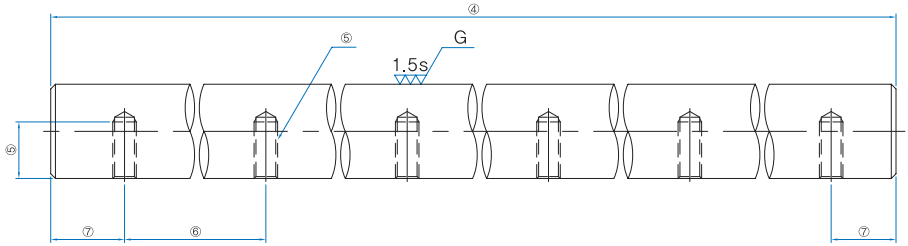

① Symbol of shaft model number

Line tapped shaft	WBS	General line tapped shaft · Material : high carbon steel for linear motion shaft (S55C), STB-2(SUJ-2)	This device is used together with a shaft line support. It is mostly applied to an environment where shaft bending or vibration occurs
	WBAS	Stainless line tapped shaft with corrosive resistance · Material : SUS440C	
	WBCS	Anti-corrosive line tapped shaft plated with hard Cr · Material : high carbon steel for linear motion shaft (S55C), STB-2(SUJ-2)	

② Outside diameter (㎜), ③ Allowable tolerance of outside diameter (㎛), ④ Length (㎜), ⑤ Tap size (㎜), ⑥ Tap distance (㎜), ⑦ Distance between both ends (㎜) / Standard length in stock

Outside diameter	Allowable tolerance of outside diameter (㎛)			Standard length in stock L (mm)					Tap size	Tap distance	Distance between both ends
D(㎜)	g6	h5	h6	1000	1200	1500	2000	3000		(㎜)	(㎜)
10	−5～−14	0～−6	0～−9						M4 x 0.7 x 6	100	50
12	−6～−17	0～−8	0～−11						M4 x 0.7 x 6	100	50
13									M4 x 0.7 x 6	100	50

Outside diameter	Allowable tolerance of outside diameter (μm)			Standard length in stock L (mm)					Tap size	Tap distance	Distance between both ends
D(㎜)	g6	h5	h6	1000	1200	1500	2000	3000		(㎜)	(㎜)
16	−7~−20	0~−9	0~−13						M5x0.8x9	150	75
20									M6x1x10	150	75
25									M6x1x12	200	100
30									M8x1.25x15	200	100
35	−9~−25	0~−11	0~−16						M8x1.25x15	200	100
40									M8x1.25x18	300	150
50									M10x1.5x22	300	150

Note : For any question about the maximum length, please contact us.

6 Shaft Supports

1. Shaft end support

It helps to support the both ends of a linear motion shaft for ball bushing without any special processing. There is a model for a plane.

For a plane

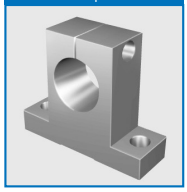

2. Shaft line support

It helps to support a line tapped shaft in an environment where there is any concern about ball shaft bending or vibration. Together with an open-type ball bushing, it is used to make a slide rail unit.

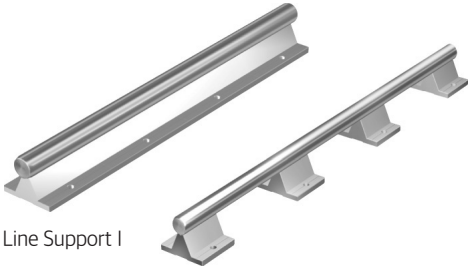

ST Series Shaft Line Support I

STU Series Shaft Line Support II

WK Type

Shaft end support for a plane

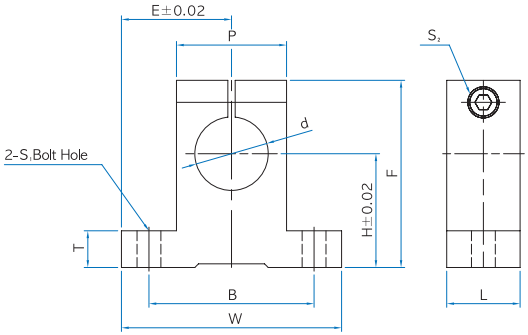

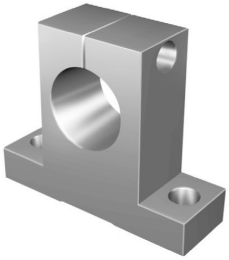

Unit : mm

Model No.	Diameter of shaft d	Main dimensions								Mounting bolt spec S_1	Fastening bolt spec S_2
		H	E	W	L	F	T	P	B		
WK 10	Ø10	20	21	42	14	32.8	6	18	32	M5	M4
WK 12	Ø12	23	21	42	14	38	6	20	32	M5	M4
WK 13	Ø13	23	21	42	14	38	6	20	32	M5	M4
WK 16	Ø16	27	24	48	16	44	8	25	38	M5	M4
WK 20	Ø20	31	30	60	20	51	10	30	45	M6	M5
WK 25	Ø25	35	35	70	24	60	12	38	56	M6	M6
WK 30	Ø30	42	42	84	28	70	12	44	64	M8	M6
WK 35	Ø35	50	49	98	32	82	15	50	74	M10	M8
WK 40	Ø40	60	57	114	36	96	15	60	90	M10	M8

● Material : Aluminum AL6061

S-ST Type

Shaft line support I

Applied ball bushing block SHO

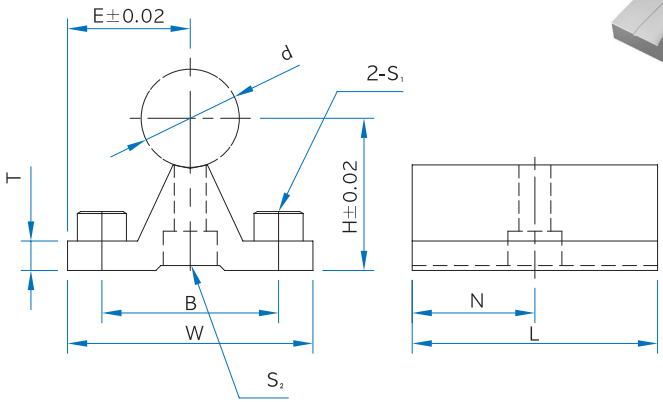

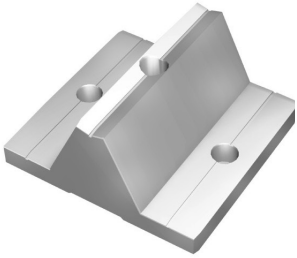

Unit : mm

Model No.	Diameter of shaft	Main dimensions					Mounting dimensions			
	d	H	E	W	L	T	B	N	S_1	S_2
S-ST16×50	Ø16	25	20	40	50	5	30	25	M5	M5
S-ST20×50	Ø20	27	22.5	45	50	5	30	25	M5	M6
S-ST25×50	Ø25	33	27.5	55	50	6	35	25	M6	M6
S-ST30×60	Ø30	37	30	60	60	7	40	30	M6	M8
S-ST40×70	Ø40	48	37.5	75	70	9	55	35	M8	M8

ST Type

Shaft line support I

Applied ball bushing block SHO

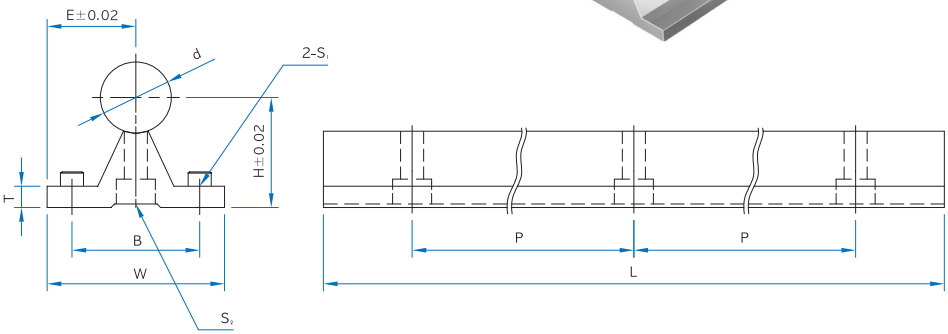

Unit : mm

Model No.	Diameter of shaft d	Main dimensions					Mounting dimensions			
		H	E	W	L	T	B	P※	S1	S2
ST 16	Ø16	25	20	40	Max. length 3m · Linking multiple supports is available	5	30	150	M5	M5
ST 20	Ø20	27	22.5	45		5	30	150	M5	M6
ST 25	Ø25	33	27.5	55		6	35	200	M6	M6
ST 30	Ø30	37	30	60		7	40	200	M6	M8
ST 40	Ø40	48	37.5	75		9	55	300	M8	M8

Note: P* dimensions can be changed at a customer request.

S-STU Type

Shaft line support II

Applied ball bushing block SHO , CSO

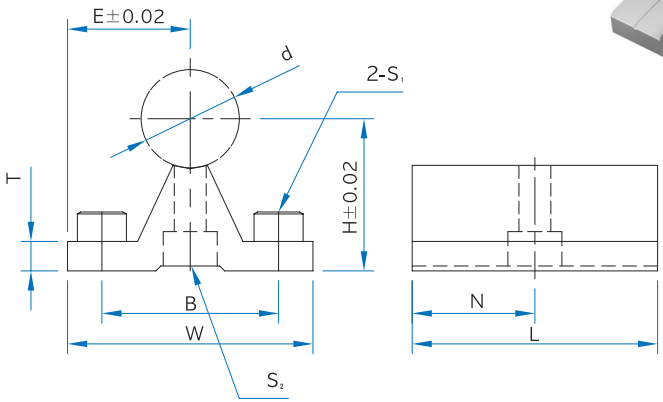

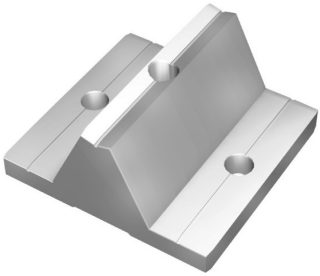

Unit : mm

Model No.	Diameter of shaft	Main dimensions					Mounting dimensions			
	d	H	E	W	L	T	B	N	S_1	S_2
S-STU16x50	ø16	27	21	42	50	6	31	25	M5	M5
S-STU20x50	ø20	31	25	50	50	6	36	25	M6	M6
S-STU25x50	ø25	36	26.5	53	50	7	39	25	M6	M6
S-STU30x60	ø30	43	33.5	67	60	8	49	30	M8	M8
S-STU40x70	ø40	55	37	74	70	11	56	35	M8	M8

STU Type

Shaft line support II

Applied ball bushing block SHO , CSO

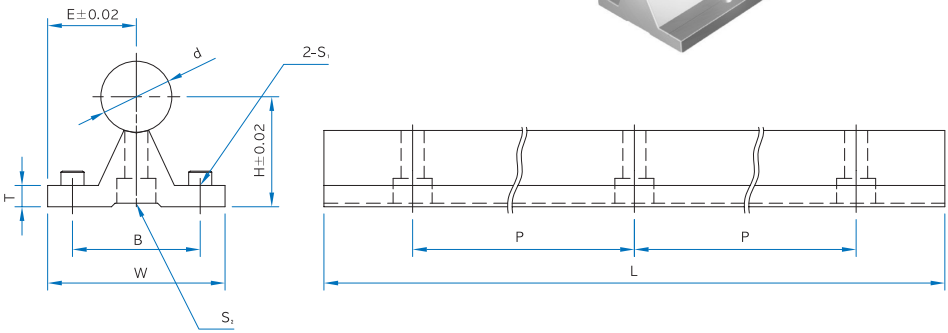

Unit : mm

Model No.	Diameter of shaft	Main dimensions					Mounting dimensions			
	d	H	E	W	L	T	B	P*	S_1	S_2
STU16	Ø16	27	21	42	Max. length 3m · Linking multiple supports is available	6	31	150	M5	M5
STU20	Ø20	31	25	50		6	36	150	M6	M6
STU25	Ø25	36	26.5	53		7	39	200	M6	M6
STU30	Ø30	43	33.5	67		8	49	200	M8	M8
STU40	Ø40	55	37	74		11	56	300	M8	M8

Note: P* dimensions can be changed at a customer request.

Slide Rail Unit

A slide rail unit is composed of an open-type block, a line tapped shaft, and a shaft line support.

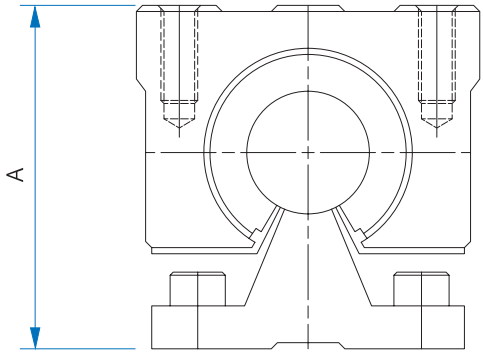

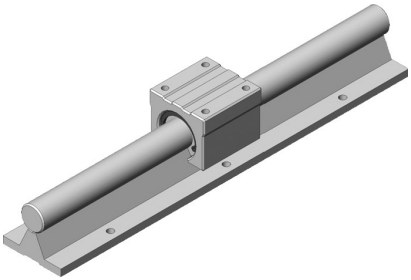

Assembly height A

Diameter of shaft	Shaft line support / Open-type block	S-ST ST	S-STU STU
16	SHO 16 UU	45	47
	CSO 16 UU		49
20	SHO 20 UU	50	54
	CSO 20 UU		56
25	SHO 25 UU	60	63
	CSO 25 UU		66
30	SHO 30 UU	70	76
	CSO 30 UU		78
40	SHO 40 UU	90	97
	CSO 40 UU		100

T.R Guide
Contents

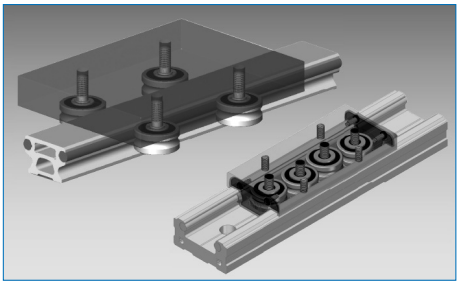

1 Track Roller Guide

1. Structure and Features

Outside Type

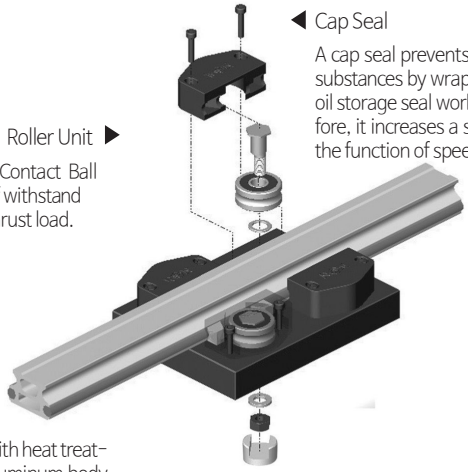

◀ Cap Seal

A cap seal prevents any intrusion of foreign substances by wrapping a roller. An internal oil storage seal works for lubrication. There fore, it increases a service life and improves the function of speed.

Roller Unit ▶

Multi-Row Angular Contact Ball Bearing is capable of withstand ing radial load and thrust load.

Guide Rail ▶

A precisely polished shaft with heat treat-ment is inserted into the aluminum body of a guide rail.

Inside Type

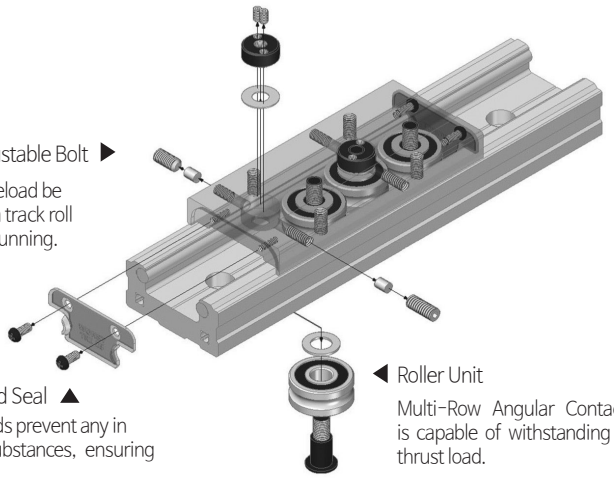

Clearance Adjustable Bolt ▶

This bolt adjusts the preload be tween a guide rail and a track roll er, supporting precise running.

End Seal ▲

The seals on both ends prevent any in trusion of foreign substances, ensuring stable running

◀ Roller Unit

Multi-Row Angular Contact Ball Bearing is capable of withstanding radial load and thrust load.

WON Track Roller Guide was developed with the experiences and knowledge that WON ST research ers have accumulated for several years. It consists of the guide rail in which a precisely polished shaft with heat treatment (HRC 62) is inserted, and a roller unit. The device supports high-speed transfer and high precision. It has a simple structure for easy installation and maintenance and a very economic linear motion system.

2. Speed and noise

In a conventional linear guide, a ball as a rolling element has the structure of circulation that causes a noise and restricts a speed of motion. In the case of a track roller guide, its circulation part has no noise, and the device can run up to the maximum rotary speed of a ball.

- Max. velocity V max = 10 m/s
- Max. acceleration A max = 50 m/s^2

3. Clearance

If preload or zero clearance is needed in between a guide rail and a track roller, it is possible to adjust clearance easily with the use of eccentric axis of a roller.

4. Load capacity in each direction

A track roller is based on multi-row angular contact ball bearing capable of withstanding load in each direction.

5. Perfect sealing and lubrication

A cap seal prevents any intrusion of foreign substances in between a track roller and a guide rail, and an oil storage seal supports lubrication.

6. Available temperature

-20℃ ~ 80℃

7. Simple installation

Thanks to its light weight and simple structure, it is easy to install and handle the product.

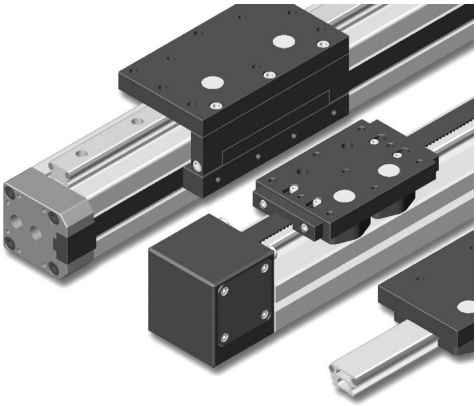

2 Types of Guide Rail

1. Outside Type

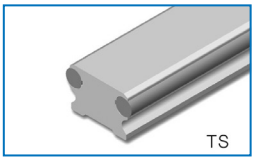

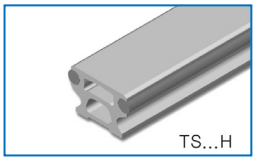

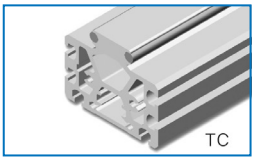

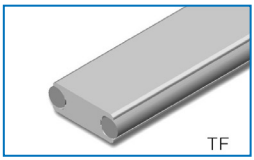

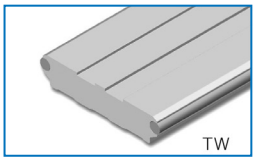

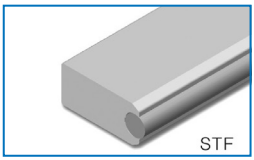

Standard and maximum lengths of guide rail

The standard length and maximum length of WON Guide Rail are presented below. In case of over maximum length, it is possible to link multiple guide rails. For other specifications, please contact us.

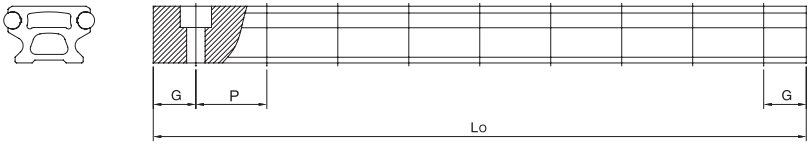

Unit:mm

Model No.	20	25	32	42	52	TW52
Standard length of guide rail (Lo)	300	300	550	675	800	675
	550	550	800	925	1050	925
	800	800	1050	1175	1300	1175
	1050	1050	1300	1425	1550	1425
	1300	1300	1550	1675	1800	1675
	1550	1550	1800	1925	2050	1925
	1800	1800	2050	2175	2300	2175
	2300	2300	2300	2425	2550	2425
	2800	2800	2550	2675	2800	2675
			2800	2925		2925
P	62.5	62.5	125	125	250	250
G	25	25	25	25	25	25
Lmax	6000	6000	6000	6000	6000	6000

2. Inside Type

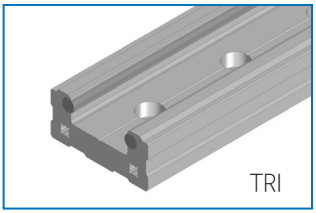

Standard and maximum lengths of guide rail

The standard length and maximum length of WON Guide Rail are presented below. In case of over maximum length, it is possible to link multiple guide rails. For other specifications, please contact us.

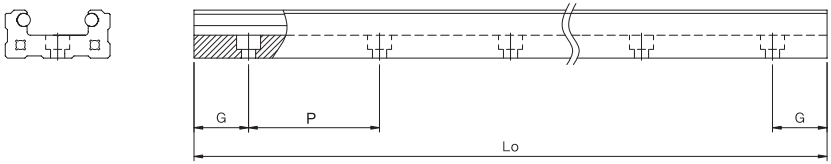

Unit:mm

Model No.	15	20	25	30	35	45	55
Standard length of guide rail (Lo)	170	230	230	310	310	625	820
	410	410	410	550	550	1045	1060
	710	710	710	630	630	1255	1540
	1010	1010	1010	1030	1030	1570	2020
	1310	1310	1310	1430	1430	2095	2500
	1610	1610	1610	1510	1510	2515	2740
	1910	1910	1910	1830	1830	3040	3100
	2210	2210	2210	2070	2070	3355	3340
	2510	2510	2510	2230	2230	3565	3580
	2810	2810	2810	2550	2550	4090	3940
	3110	3110	3110	2630	2630	4510	4060
	3410	3410	3410	3030	3030		4540
	3710	3710	3710	3430	3430		
	4010	4010	4010	3830	3830		
	4310	4310	4310	4630	4630		
P	60	60	60	80	80	105	120
G	25	25	25	35	35	50	50
Lmax	6000	6000	6000	6000	6000	6000	6000

3 Types of Block

1. Outside Type

The block for WON Tracker Roller Guide is classified into Fixture Block and Clearance Adjustable Block.

- Fixture block

A fixture block is put together with a precise guide rail well. The gap between the rail and the block is 20㎛ or so. Economically, the block needs no eccentric bolt for clearance adjustment.

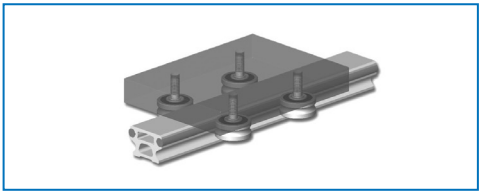

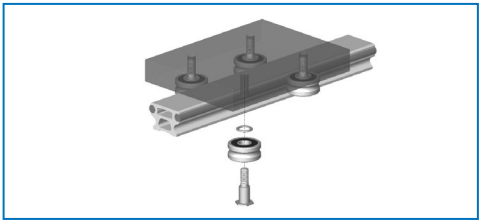

- Clearance Adjustable Block

A clearance adjustable block is used to apply zero gap or preload.

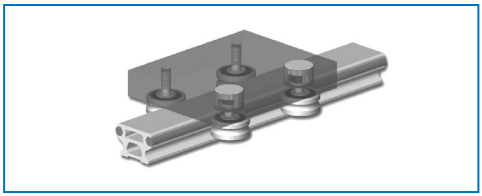

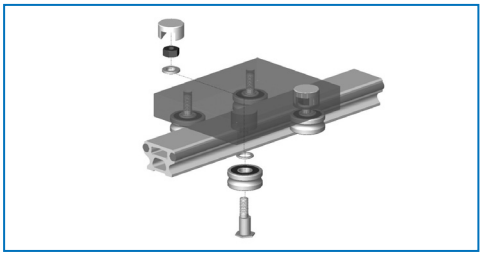

- Maximum allowable load

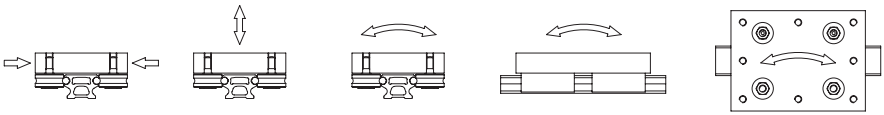

Model No.	Fymax (N)	Foymax (N)	Fzmax (N)	Fozmax (N)	Mxmax (N·m)	Moxmax (N·m)	Mymax (N·m)	Moymax (N·m)	Mzmax (N·m)	Mozmax (N·m)
20	406	400	238	200	1.9	1.6	5.9	5.0	10.2	10.0
25	1495	1140	713	560	6.8	5.3	19.6	15.4	41.1	31.4
32	1495	1140	713	560	9.3	7.3	23.2	18.2	48.6	37.1
42	3574	2600	1663	1240	26.6	19.8	58.2	43.4	125.1	91.0
52	3574	2600	1663	1240	34.9	26.0	74.8	55.8	160.8	117.0

※ The load in use should not exceed the maximum allowable load shown in the table.

1N≒0.102kgf
1N·m ≒0.102kgf·m

2. Inside Type

The block for WON Tracker Roller Inside Type (TRI) is classified into Fixture Block and Clearance Ad justable Block.

- Fixture block

A fixture block is put together with a precise guide rail well. The gap between the rail and the block is 20㎛ or so. Economically, the block needs no eccentric bolt for clearance adjustment.

- Clearance adjustable block

A clearance adjustable block is used to apply zero gap or preload.

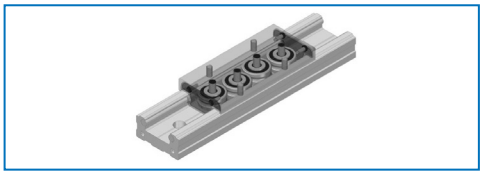

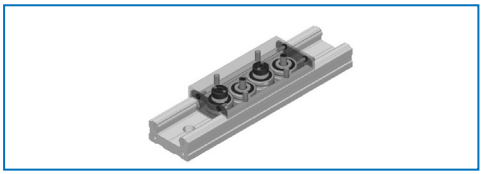

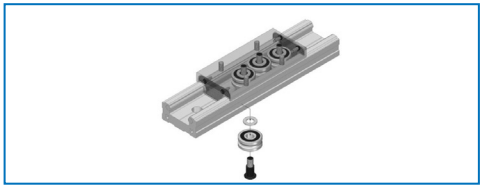

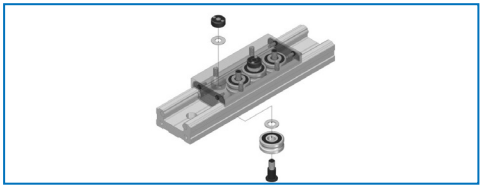

- Maximum allowable load

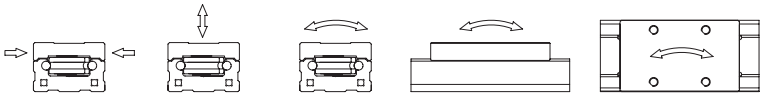

Model No.	F_{ymax} (N)	F_{oymax} (N)	F_{zmax} (N)	F_{ozmax} (N)	M_{xmax} (N·m)	M_{oxmax} (N·m)	M_{ymax} (N·m)	M_{oymax} (N·m)	M_{zmax} (N·m)	M_{ozmax} (N·m)
TRI 15	406	400	194	150	1.8	1.4	3.3	2.6	6.9	6.8
TRI 15L	406	400	238	200	2.3	1.9	6.3	5.3	10.8	10.7
TRI 20	406	400	194	150	2.3	1.8	3.5	2.7	7.3	7.2
TRI 20L	406	400	238	200	2.9	2.4	7.8	6.6	13.4	13.2
TRI 25	1495	1140	583	420	9.0	6.5	14.6	10.5	37.4	28.5
TRI 25L	1495	1140	713	560	11.0	8.7	26.7	21.0	56.0	42.8
TRI 30	1495	1140	583	420	10.5	7.6	15.7	11.3	40.4	30.8
TRI 30L	1495	1140	713	560	12.8	10.1	31.0	24.4	65.0	49.6
TRI 35	3574	2600	1359	930	30.6	20.9	48.9	33.5	128.7	93.6
TRI 35L	3574	2600	1663	1240	37.4	27.9	89.8	67.0	193.0	140.4
TRI 45	3574	2600	1359	930	34.0	23.3	50.3	34.4	132.2	96.2
TRI 45L	3574	2600	1663	1240	41.6	31.0	99.8	74.4	214.4	156.0
TRI 55	3574	2600	1359	930	40.8	27.9	61.2	41.9	160.8	117.0
TRI 55L	3574	2600	1663	1240	49.9	37.2	122.2	91.1	262.7	191.1

※ The load in use should not exceed the maximum allowable load shown in the table.

1N≒0.102kgf
1N·m ≒0.102kgf·m

4 Assembly and Adjustment

1. Outside Type

The clearance adjustable block for WON Track Roller Guide makes it possible to run precisely through clearance adjustment.

※ While the block is running smoothly, all bearings rotate and accurate adjustment is made. If a bearing is adjusted with too much force, it is possible to shorten service life of a system.

1) By connecting fully the bearing in the concentric axis (which is the basis) and temporarily the bearing in the eccentric axis, it is possible to secure a sufficient gap between a rail and a clearance adjustable block.
2) After the block is put together with a rail, slowly turn an adjustment wrench until the bearing in the eccentric axis contacts rightly the rail.
3) If the bearing in the eccentric axis is adjusted accurately, fasten a fixture nut fully according to the roller assembly torque shown below.

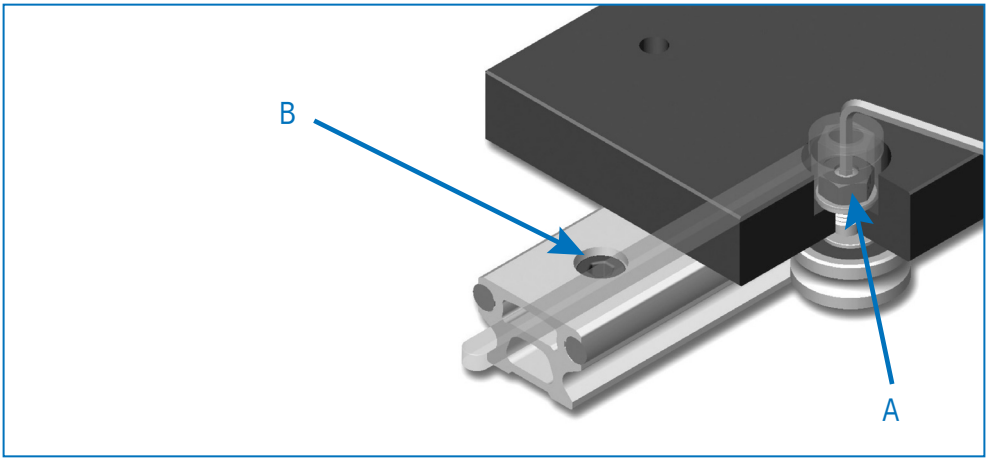

- Roller Assembly Torque (A)

Model No.	20	25	32	42	52
Max (N·m)	2.0	8.0	8.0	46	46

- Rail Assembly Torque(B)

Model No.	M5	M6	M8	M10	M12
Max (N·m)	5.8	9.9	24	48	80

1N≒0.102kgf
1N·m ≒0.102kgf·m

2. Inside Type

The clearance adjustable block for WON Track Roller Guide Inside Type (TRI) makes it possible to run precisely through clearance adjustment.

1) By connecting fully a fixture bearing (which is the basis) and temporarily an adjustable bearing, it is possible to secure a sufficient gap between a rail and a clearance adjustable block.
2) After the block is put together with a guide rail, slowly turn the adjustment bolt on the side of the block until a roller contacts the rail.
   - While the block runs smoothly, it is required to rotate all bearings for adjustment.
   - If a bearing is adjusted with too much force, it is possible to shorten service life of a system.
3) If the adjustable bearing is adjusted accurately, fasten a nut and bolt fully according to the roller assembly torque shown below.
4) Fasten the loose-proof bolt on the top of the nut.

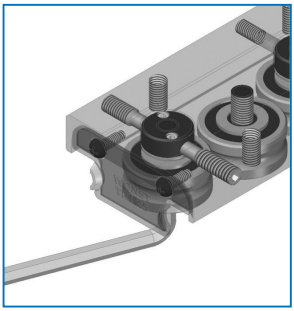

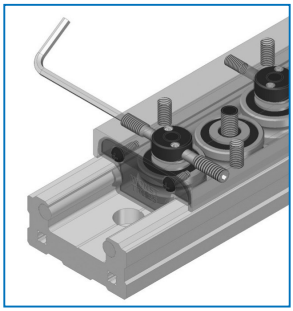

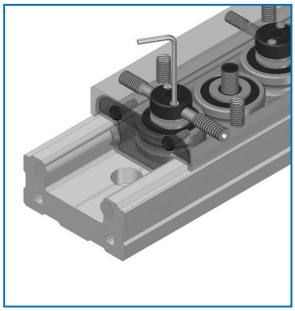

- Roller Assembly Torque

Model No.	15	20	25	30	35	45	55
Max (N·m)	2.0	2.0	8.0	8.0	46	46	46

- Rail Assembly Torque

Model No.	15(M4)	20(M5)	25(M6)	30(M6)	35(M8)	45(M10)	55(M12)
Max (N·m)	2.5	5.8	9.9	9.9	24	48	80

1N≒0.102kgf
1N·m ≒0.102kgf·m

5 Track Roller

A track roller based on multi-row angular contact ball bearing is composed of an eccentric axis roller and a concentric axis roller.

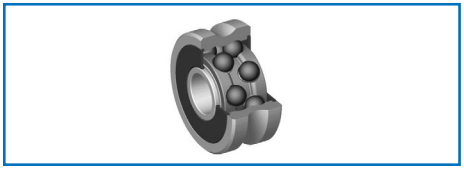

- Concentric Axis Roller

This roller is used in the case where there is an instal lation in the fixture axis, the opposite of eccentric axis, or where there is no need of clearance adjustment.

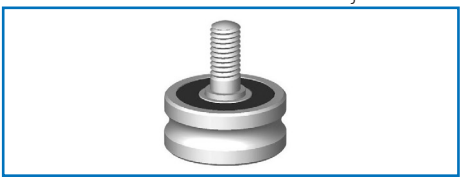

- Eccentric Axis Roller

This roller is used to apply zero clearance between a guide rail and a roller or preload.

6 End Seal (T Type)

This seal is installed before and after a block in order to prevent foreign substances from intruding in a roller. It helps to extend a life and improve running stability.

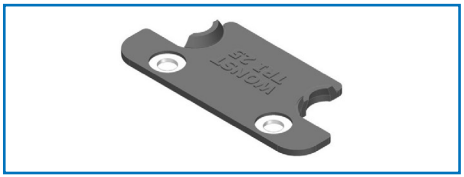

7 Cap Seal

- This seal wraps a roller in order to prevent foreign substances from intruding in the raceway surface.
- A seal storing a lubricant supplies the lubricant to the contact surface.
- It is designed to refill the contact surface.
- It helps to extend a life and improve running sta bility.

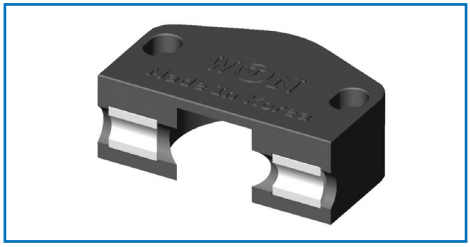

8 Assembly and adjustment of cap seal

It is recommended to mount a cap seal after a roller is adjusted completely.
To mount a cap seal on a block, do the following:
1. Separate the block from a guide rail. 2. Temporarily connect the cap seal with the block in order to secure a sufficient gap of the cap seal. 3. Put the cap seal to gether with the guide rail again. 4. Adjust clearance by making the cap seal in contact with the shaft surface.
※ The more contact with the shaft, the better sealing effect. In this case, be careful of friction increase.

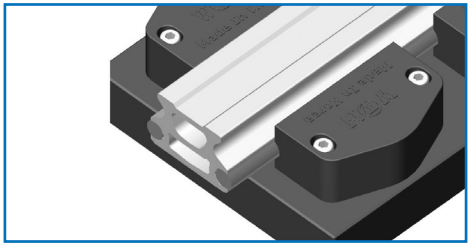

9 Precision

For the precision of WON Track Roller Guide, inspect its precision after installing a rail in the datum plane of floor.

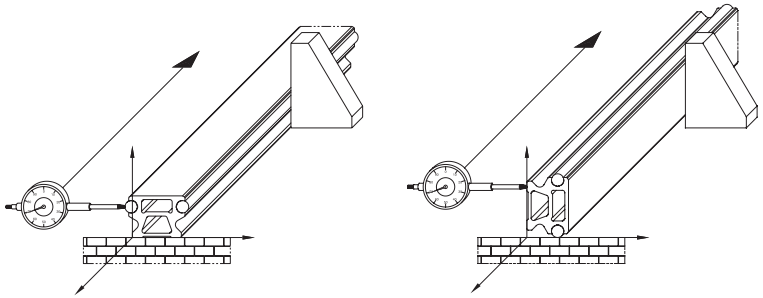

Figure 1. Measurement method

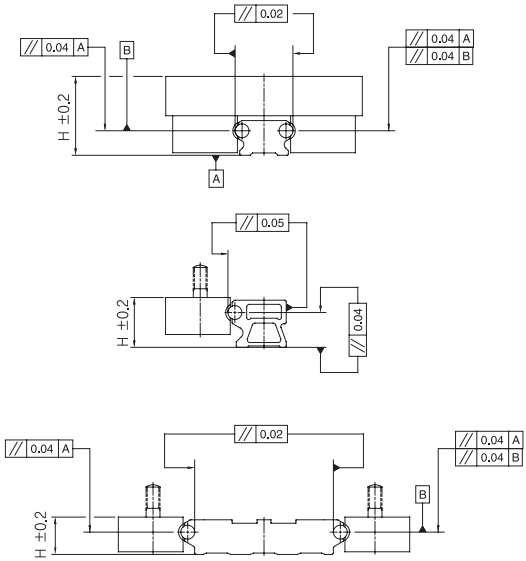

Figure 2. Precision

10 Rating life

Rating life refers to a total travel distance that 90% in one group of bearings run without any material damage.

1. Basic dynamic load rating C (basic dynamic moment M)

Basic dynamic load rating (basic dynamic rated moment) refers to the load (moment) with which 90% in one group of bearings can run 100km without any material damage.

2. Basic static load rating Co (basic static moment Mo)

Basic static load rating (basic static rated moment) refers to the load and (moment) that can cause the race way surface of a bearing and the rolling element to be deformed permanently as many as 0.0001 of diameter of the rolling element.

3. Maximum allowable load (maximum allowable moment)

Maximum allowable load (maximum allowable moment) refers to the maximum load (maximum moment) that allows smooth linear motion in consideration of load transmission capacity of a track roller, and the inten sity of rail, block, and jointing bolt.

4. Rating life for the load in each direction

$$L = \left(\frac{C_{yz}}{P}\right)^3 \cdot 10^5$$

$$L_h = \frac{L}{2 \cdot \ell_s \cdot n_1 \cdot 60}$$

L	: Rating life	(m)
Lh	: Rating life	(h)
Cyz	: Basic dynamic load rating in each direction	(N)
P	: Operating load in each direction	(N)
ℓs	: Stroke length	(m)
n1	: No. of strokes	(o.p.m.)

※ If operating load is less than the maximum allowable load Cyz, it is required to calculated rating life in the above formula.

5. Rating life for the moment in each direction

$$L = \left(\frac{M_{xyz}}{M}\right)^3 \cdot 10^5$$

$$L_h = \frac{L}{2 \cdot \ell_s \cdot n_1 \cdot 60}$$

L	: Rating life	(m)
Lh	: Rating life	(h)
Mxyz	: Basic dynamic rated moment in each direction	(N • m)
M	: Operating moment in each direction	(N • m)
ℓs	: Stroke length	(m)
n1	: No. of strokes	(o.p.m.)

※ If operating moment is less than the maximum allowable moment Mxyz, it is required to calculated rating life in the above formula.

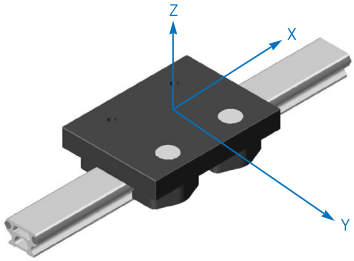

STF Series Guide Rail

An example of the composition of model name & number

STF32 — 1300

1 3

1 Model No.
2 Rail length

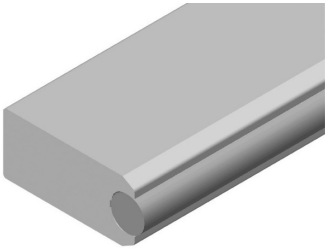

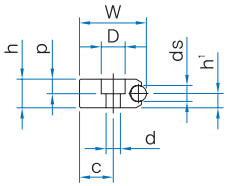

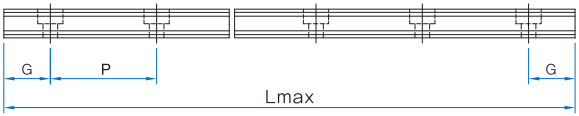

Unit:mm

Model No.	Main dimensions		Dimensions of rail						
	W	L (max.)	c	ds	h	h_1	d×D×p	G	P
STF 32	26	6000	10	6	10	5	6.5×12×6.5	25	125
STF 52	42	6000	16	10	18	9	11×19×13	25	250

※ For other specifications, please contact us
※ For vertical use, please contact us.

TS Series

An example of the composition of model name & number

TS32H — 2 BC [ ] — 1300

1 2 3 4 5

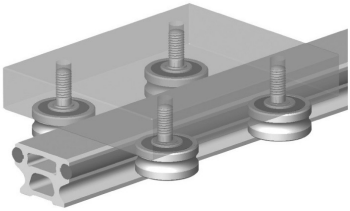

1 Model No.
2 Number of blocks assembled in one shaft
3 Type of block: B-Fixture Block, BC-Clearance Adjustable Block
4 No symbol- No cap seal, S-Cap seal attached
5 Length of rail

Basic load rating and moment

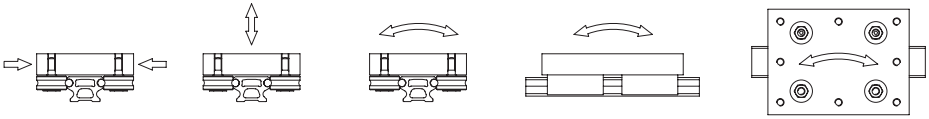

Model No.	Basic load rating				Allowable static moment					
	Cy (N)	Coy (N)	Cz (N)	Coz (N)	Mx (N·m)	Mox (N·m)	My (N·m)	Moy (N·m)	Mz (N·m)	Moz (N·m)
TS 20	1860	1600	870	760	7.0	6.1	21.8	19.0	46.7	40.0
TS 25	5960	4560	2850	2200	27.1	20.9	78.4	60.5	164.0	125.4
TS 32H	5960	4560	2850	2200	37.1	28.6	92.6	71.5	193.8	148.2
TS 42H	13930	10200	6620	4920	106.0	78.7	231	172	487	357
TS 52H	13930	10200	6620	4920	139.0	103	298	221	627	459

※ For other specifications, please contact us.
※ The rail of TS 32H or more has a hollow type.
※ The values of load rating and moment are needed for life calculation. For the value of maximum allowable load, see the information at page 306.
※ For vertical use, please contact us.

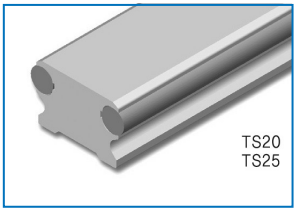

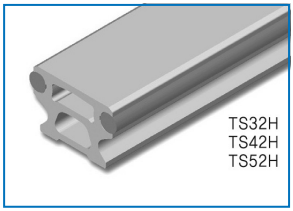

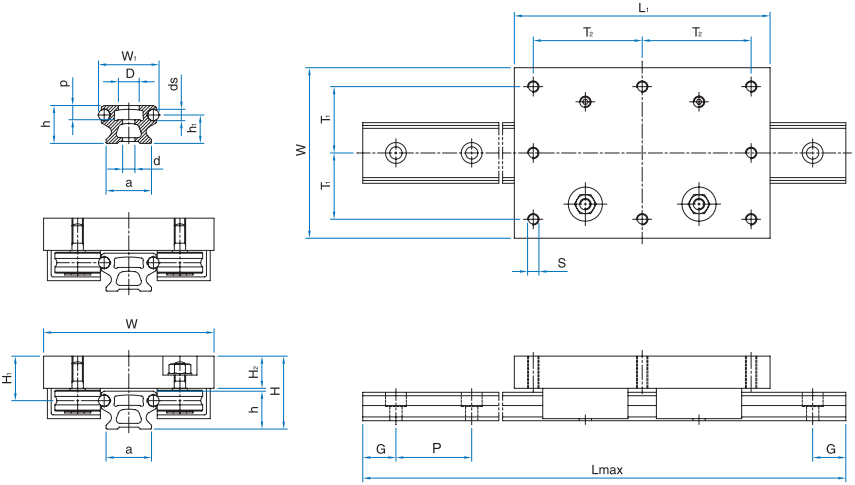

Unit:mm

Model No.	Main dimensions					Dimensions of block					Dimensions of rail						
	W	W_1	L (max.)	L_1	H	H_1	H_2	S	T_1	T_2	a	ds	h	h_1	d×D×p	G	P
TS 20	60	20	6000	110	25.5	16.5	12.5	M 5	25	50	17	4	12.2	9	4.5×8×4.6	25	62.5
TS 25	85	25	6000	125	34.1	23.5	17	M 6	35	55	21	6	15	10.6	5.5×10×6.5	25	62.5
TS 32H	90	32	6000	145	38.5	23.5	17	M 6	37.5	65	24	6	20	15	6.5×12×7.5	25	125
TS 42H	120	42	6000	170	47.5	34.9	25.2	M 8	50	75	28	10	20	12.6	9×15×8.5	25	125
TS 52H	130	52	6000	205	60	34.9	25.2	M10	52.5	90	40	10	34	25.1	11×19×13	25	250

1N ≒ 0.102kgf

1N·m ≒ 0.102kgf • m

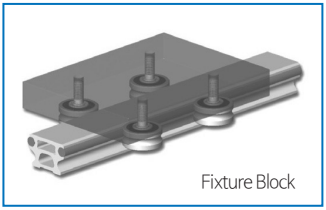
Fixture Block

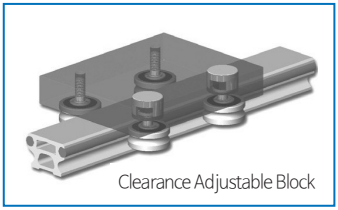
Clearance Adjustable Block

TC Series

An example of the composition of model name & number

TC25 — 2 BC [ ] — 1300
1 2 3 4 5

1 Model No.
2 Number of blocks assembled in one shaft
3 Type of block: B-Fixture Block, BC-Clearance Adjustable Block
4 No symbol- No cap seal, S-Cap seal attached
5 Length of rail

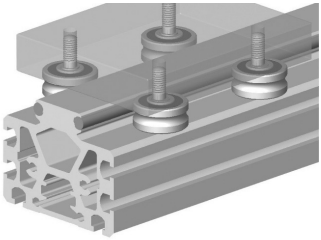

Basic load rating and moment

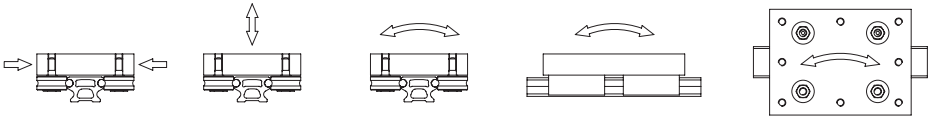

Model No.	Basic load rating				Allowable static moment					
	Cy (N)	Coy (N)	Cz (N)	Coz (N)	Mx (N·m)	Mox (N·m)	My (N·m)	Moy (N·m)	Mz (N·m)	Moz (N·m)
TC 20	1860	1600	870	760	7.0	6.1	21.8	19.0	46.7	40.0
TC 25	5960	4560	2850	2200	27.1	20.9	78.4	60.5	164	125
TC 52	13930	10200	6620	4920	139	103	298	221	627	459

※ For other specifications, please contact us.
※ The values of load rating and moment are needed for life calculation. For the value of maximum allowable load, see the information at page 306.
※ For vertical use, please contact us.

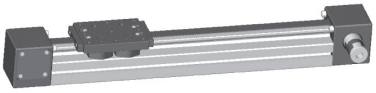
Customized product

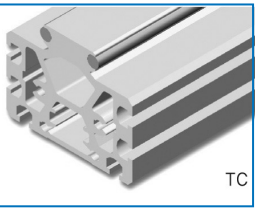
TC

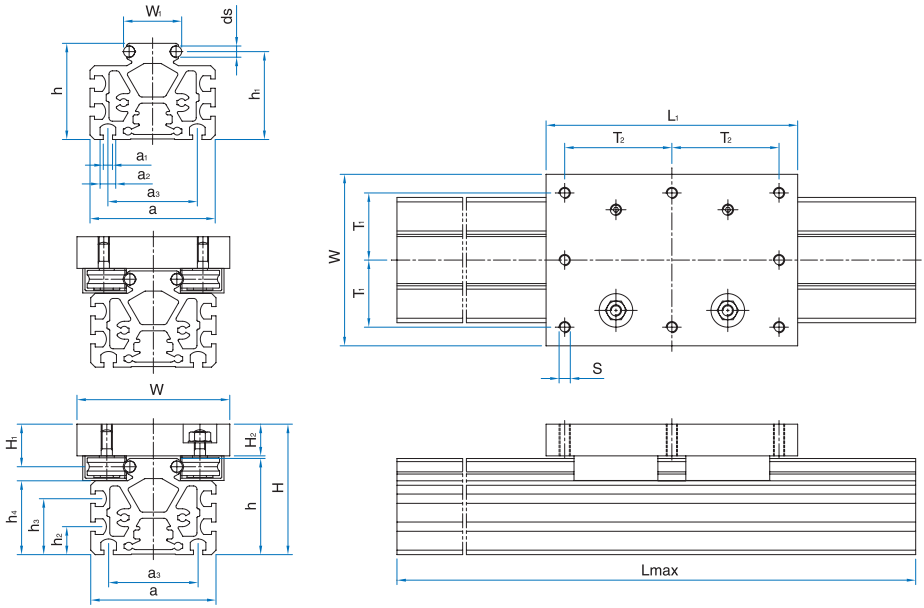

Unit:mm

Model No.	Main dimensions					Dimensions of block					Dimensions of rail									
	W	W_1	L (max.)	L_1	H	H_1	H_2	S	T_1	T_2	a	a_1	a_2	a_3	ds	h	h_1	h_2	h_3	h_4
TC 20	60	20	6000	110	57	16.5	12.5	M 5	25	50	56	5.3	8.3	30	4	43.7	40.5	22	–	31.5
TC 25	85	25	6000	125	81.1	23.5	17	M 6	35	55	75	8.3	14	43	6	62	57.6	25	–	47
TC 52	130	52	3000	205	113.5	34.9	25.2	M10	52.5	90	112	8.3	14	80	10	86	78.6	25	50	66

※ For the specifications of bracket, see the information at page 332.

1N ≒ 0.102kgf
1N·m ≒ 0.102kgf • m

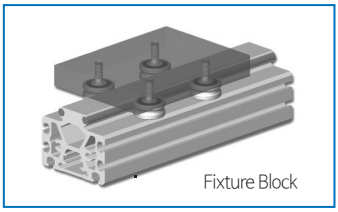
Fixture Block

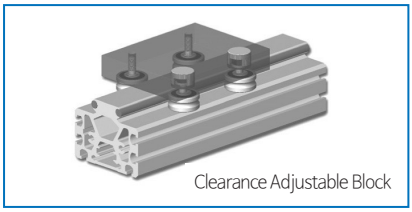
Clearance Adjustable Block

TF Series

An example of the composition of model name & number

TF32 — 2 BC [ ] — 1300

1 2 3 4 5

1 Model No.
2 Number of blocks assembled in one shaft
3 Type of block: B-Fixture Block, BC-Clearance Adjustable Block
4 No symbol- No cap seal, S-Cap seal attached
5 Length of rail

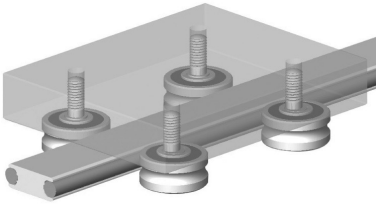

Basic load rating and moment

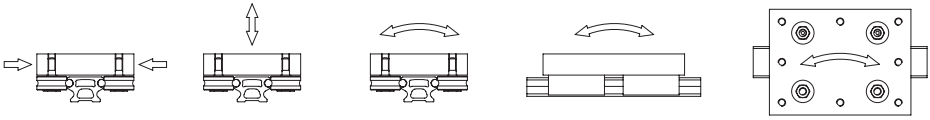

Cy Cz Mx My Mz

Model No.	Basic load rating				Allowable static moment					
	Cy (N)	Coy (N)	Cz (N)	Coz (N)	Mx (N·m)	Mox (N·m)	My (N·m)	Moy (N·m)	Mz (N·m)	Moz (N·m)
TF 32	5960	4560	2850	2200	37.1	28.6	92.6	71.5	193	148
TF 42	13930	10200	6620	4920	106	78.7	231	172	487	357
TF 52	13930	10200	6620	4920	139	103	298	221	627	459

※ For other specifications, please contact us.
※ The values of load rating and moment are needed for life calculation. For the value of maximum allowable load, see the information at page 306.
※ For vertical use, please contact us.

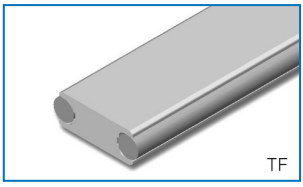
TF

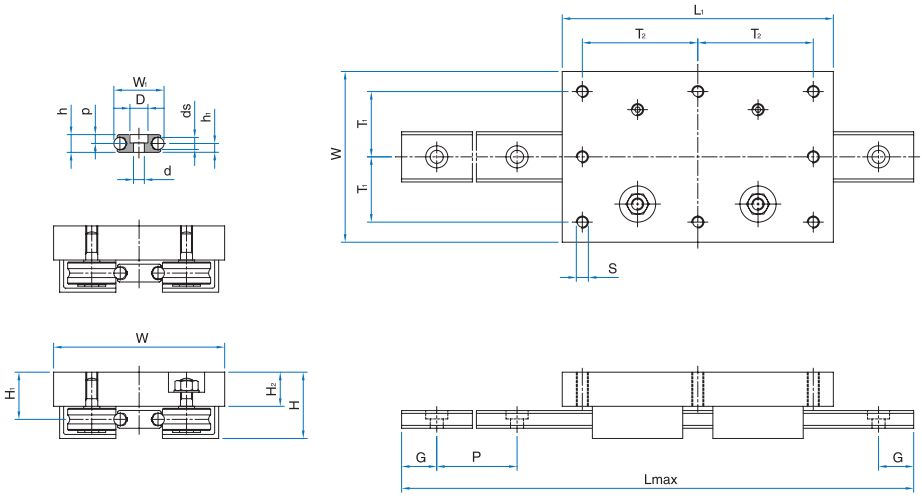

Unit:mm

Model No.	Main dimensions					Dimensions of block					Dimensions of rail					
	W	W_1	L (max.)	L_1	H	H_1	H_2	S	T_1	T_2	ds	h	h_1	d×D×p	G	P
TF 32	90	32	6000	145	33	23.5	17	M 6	37.5	65	6	10	5	6.5×12×6.5	25	125
TF 42	120	42	6000	170	47.2	34.9	25.2	M 8	50	75	10	15	7.5	9×15×7	25	125
TF 52	130	52	6000	205	47.2	34.9	25.2	M10	52.5	90	10	18	9	11×19×10	25	250

1N ≒ 0.102kgf

1N·m ≒ 0.102kgf • m

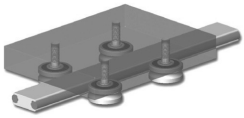

Fixture Block

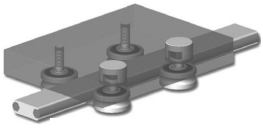

Clearance Adjustable Block

TW Series

An example of the composition of model name & number

TW52 — 2 BC [ ] — 1425

1 2 3 4 5

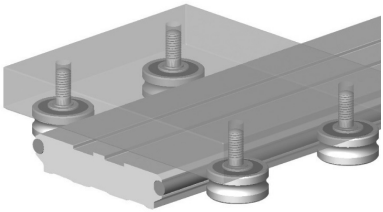

1. Model No.
2. Number of blocks assembled in one shaft
3. Type of block: B-Fixture Block, BC-Clearance Adjustable Block
4. No symbol- No cap seal, S-Cap seal attached
5. Length of rail

Basic load rating and moment

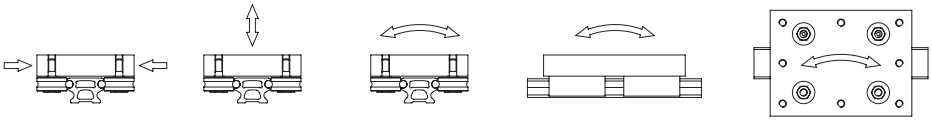

Cy Cz Mx My Mz

Model No.	Basic load rating				Allowable static moment					
	Cy (N)	Coy (N)	Cz (N)	Coz (N)	Mx (N·m)	Mox (N·m)	My (N·m)	Moy (N·m)	Mz (N·m)	Moz (N·m)
TW 52	13938	10200	6620	4920	364.3	270.6	298.1	221.4	627.2	459.0

※ For other specifications, please contact us.
※ The values of load rating and moment are needed for life calculation. For the value of maximum allowable load, see the information at page 306.
※ For vertical use, please contact us.

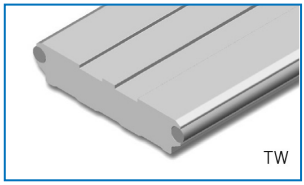

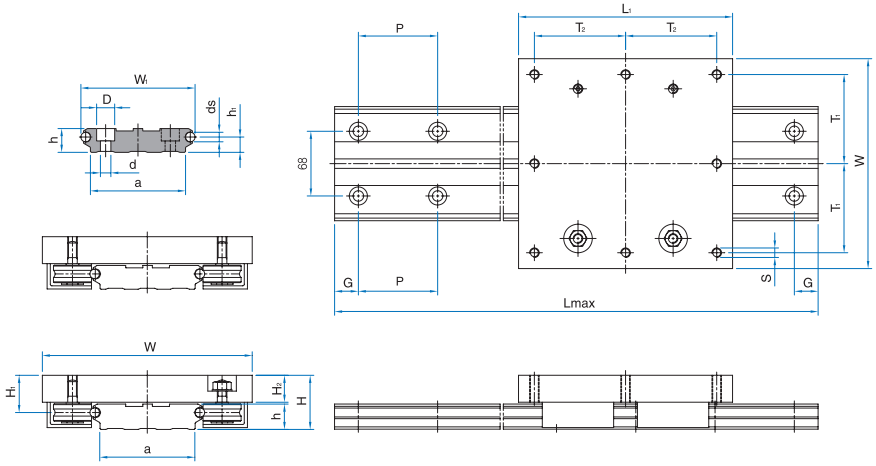

Unit:mm

Model No.	Main dimensions					Dimensions of block					Dimensions of rail						
	W	W_1	L (max.)	L_1	H	H_1	H_2	S	T_1	T_2	a	ds	h	h_1	d×D×P	G	P
TW 52	200	120	6000	205	51	34.9	25.2	M10	87.5	90	100	10	25	16.1	11×19×13	25	250

1N ≒ 0.102kgf

1N·m ≒ 0.102kgf • m

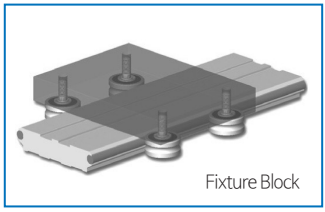
Fixture Block

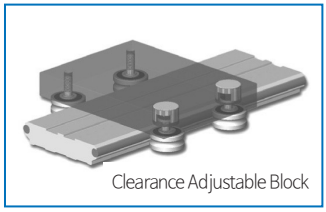
Clearance Adjustable Block

TRI Series - Standard Type

An example of the composition of model name & number

TRI25 — 2 BC UU — 1300

1 2 3 4 5

1 Model No.
2 Number of blocks assembled in one shaft
3 Type of block: B-Fixture Block, BC-Clearance Adjustable Block
4 No symbol-No end seal, UU-End seal attached
5 Length of rail

Basic load rating and moment

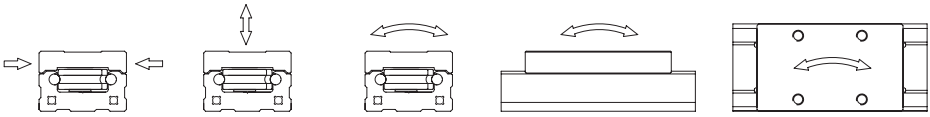

Cy Cz Mx My Mz

Model No.	Basic load rating				Allowable static moment					
	Cy (N)	Coy (N)	Cz (N)	Coz (N)	Mx (N·m)	Mox (N·m)	My (N·m)	Moy (N·m)	Mz (N·m)	Moz (N·m)
TRI 15	1860	1600	710	570	8.3	5.4	12.1	9.7	31.8	27.2
TRI 20	1860	1600	710	570	8.5	6.8	12.8	10.3	33.6	28.8
TRI 25	5960	4560	2330	1650	36.1	25.6	58.3	41.3	149	114
TRI 30	5960	4560	2330	1650	41.9	29.7	62.9	44.6	161	123
TRI 35	13900	10200	5410	3690	121	83.0	195	132	501	367
TRI 45	13900	10200	5410	3690	135	92.3	200	136	515	377
TRI 55	13900	10200	5410	3690	162	110	243	166	627	459

※ For other specifications, please contact us.
※ The values of load rating and moment are needed for life calculation. For the value of maximum allowable load, see the information at page 307.
※ For vertical use, please contact us.

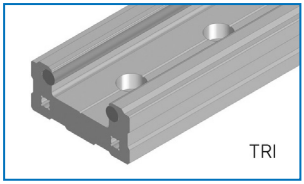

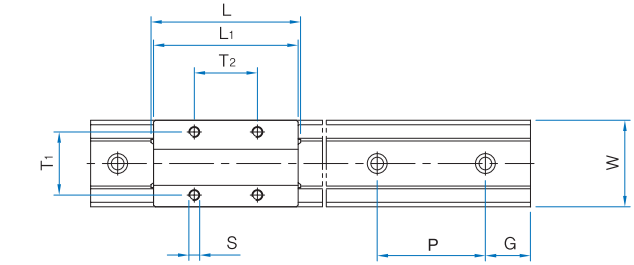

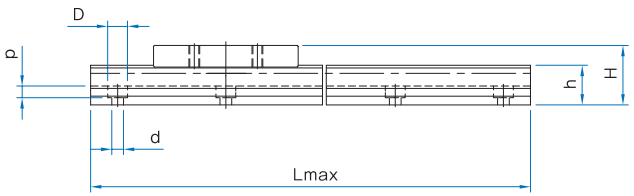

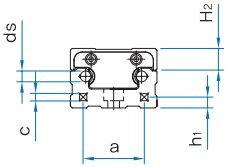

Unit:mm

Model No.	Main dimensions				Dimensions of block					Dimensions of rail							
	W	H	L	Lmax	L1	H2	S	T1	T2	ds	h	h1	a	c	d×D×p	G	P
TRI 15	34	24	57	6000	54.2	10.3	M4	26	26	4	14.7	4	24	3.3	4.5×8×4.5	25	60
TRI 20	42	28	66.2	6000	63.4	11.3	M5	32	32	4	17.7	5	30	3.3	5.5×9.4×5.5	25	60
TRI 25	48	33	83	6000	80.2	12	M6	35	35	6	22	6	34	4.2	6.5×11×6.5	25	60
TRI 30	60	42	96.8	6000	94	17.5	M8	40	40	6	26	7	44	5	6.5×11×6.5	35	80
TRI 35	70	48	117	6000	114.2	18.5	M8	50	50	10	31.5	8	50	6.8	9×14×9	35	80
TRI 45	86	60	126	6000	123.2	23	M10	60	60	10	39.5	12	60	6.8	11×17.5×11	50	105
TRI 55	100	68	156	6000	153.2	28	M12	75	75	12	43.5	12	70	8.5	13×20×13	50	120

1N ≒ 0.102kgf
1N·m ≒ 0.102kgf·m

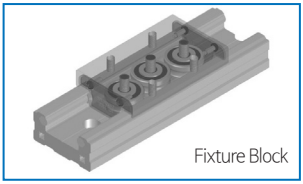
Fixture Block

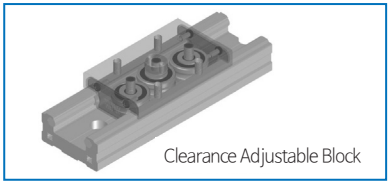
Clearance Adjustable Block

TRI Series - Long Type

An example of the composition of model name & number

TRI25L — 2 BC UU — 1300

1 2 3 4 5

1 Model No.
2 Number of blocks assembled in one shaft
3 Type of block: B-Fixture Block, BC-Clearance Adjustable Block
4 No symbol-No end seal, UU-End seal attached
5 Length of rail

Basic load rating and moment

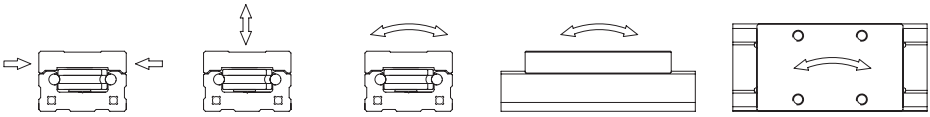

Cy Cz Mx My Mz

Model No.	Basic load rating				Allowable static moment					
	Cy (N)	Coy (N)	Cz (N)	Coz (N)	Mx (N·m)	Mox (N·m)	My (N·m)	Moy (N·m)	Mz (N·m)	Moz (N·m)
TRI 15L	1860	1600	870	760	8.3	7.2	23.2	20.3	49.9	42.7
TRI 20L	1860	1600	870	760	10.5	9.1	28.7	25.1	61.6	52.8
TRI 25L	5960	4560	2850	2200	44.2	34.1	106	82.5	223	171
TRI 30L	5960	4560	2850	2200	51.3	39.6	124	95.7	259	198
TRI 35L	13900	10200	6620	4920	149	110	357	265	752	550
TRI 45L	13900	10200	6620	4920	165	123	397	295	836	612
TRI 55L	13900	10200	6620	4920	198	147	486	361	1024	749

※ For other specifications, please contact us.
※ The values of load rating and moment are needed for life calculation. For the value of maximum allowable load, see the information at page 307.
※ For vertical use, please contact us.

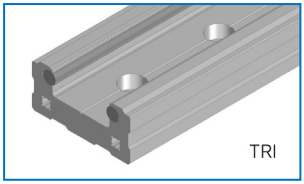

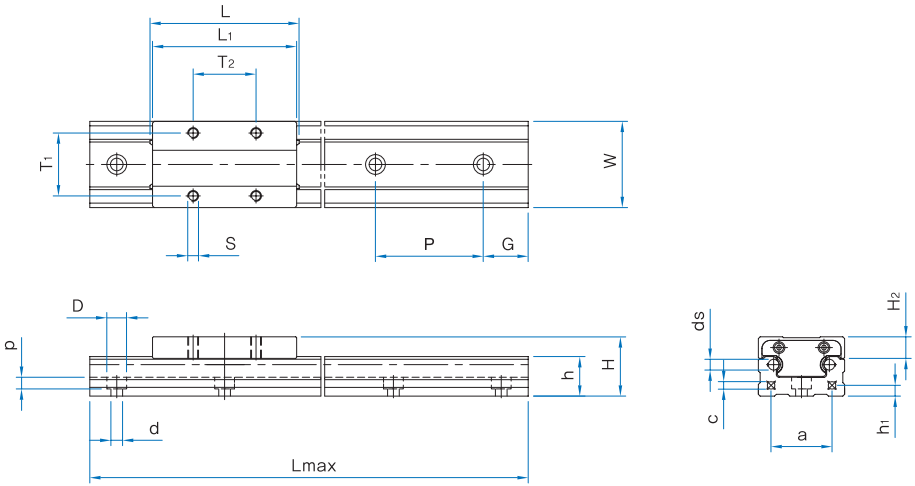

Unit:mm

Model No.	Main dimensions				Dimensions of block					Dimensions of rail							
	W	H	L	Lmax	L1	H2	S	T1	T2	ds	h	h1	a	c	d×D×p	G	P
TRI 15L	34	24	79.4	6000	76.6	10.3	M4	26	34	4	14.7	4	24	3.3	4.5×8×4.5	25	60
TRI 20L	42	28	98	6000	95.2	11.3	M5	32	50	4	17.7	5	30	3.3	5.5×9.4×5.5	25	60
TRI 25L	48	33	109	6000	106.2	12	M6	35	50	6	22	6	34	4.2	6.5×11×6.5	25	60
TRI 30L	60	42	131	6000	128.2	17.5	M8	40	60	6	26	7	44	5	6.5×11×6.5	35	80
TRI 35L	70	48	152	6000	149.2	18.5	M8	50	72	10	31.5	8	50	6.8	9×14×9	35	80
TRI 45L	86	60	174	6000	171.2	23	M10	60	80	10	39.5	12	60	6.8	11×17.5×11	50	105
TRI 55L	100	68	213	6000	210.2	28	M12	75	95	12	43.5	12	70	8.5	13×20×13	50	120

1N ≒ 0.102kgf
1N·m ≒ 0.102kgf·m

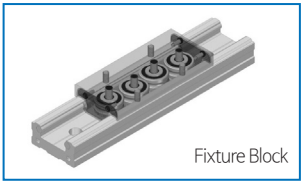
Fixture Block

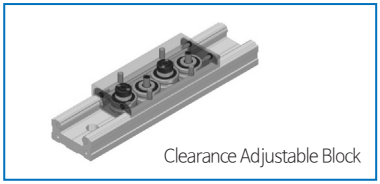
Clearance Adjustable Block

RF Series/ RA Series Track Roller (Outside Type)

An example of the composition of model name & number

RF 04
1 2

1 Model type: RF-Concentric Roller, RA-Eccentric Roller
2 Model No.

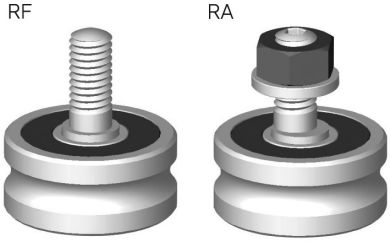

Load of applied roller

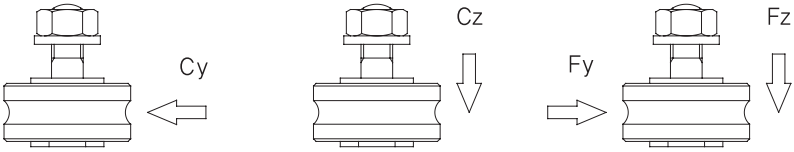

Model No.	Cy (N)	Coy (N)	Cz (N)	Coz (N)	Fymax. (N)	Fzmax. (N)
RF 04/RA 04	1150	800	330	190	250	100
RF 06/RA 06	3670	2280	1080	550	920	270
RF 10/RA 10	8580	5100	2510	1230	2200	630
RF 12	8580	5100	2510	1230	2200	630

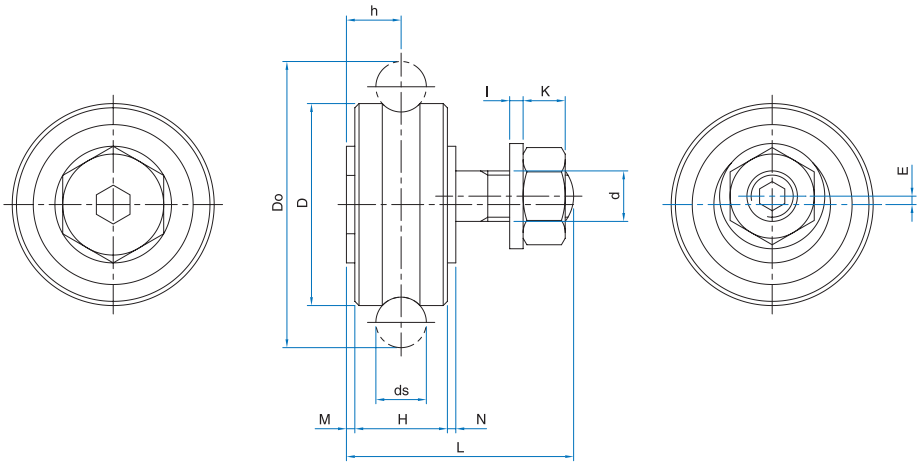

Unit:mm

Model No.	ds	d	D	Do	H	h	E	M	N	L	I	K	Applied rail
RF 04	4	4	16	22	7	5	–	1.5	0.5	18.5	0.5	2.4	20
RA 04							0.5						
RF 06	6	6	24	34	11	6.5	–	1	1	27	1.6	5	25, 32
RA 06							1						
RF 10	10	10	35	51.3	15.9	8.95	–	1	1.7	40.5	2	8	42, 52
RA 10							1						
RF 12	12	10	42	60.93	19	9.5	–	–	3	43.2	1	12.5	55

1N ≒ 0.102kgf
1N·m ≒ 0.102kgf • m

RFI Series Track Roller (Inside Type)

An example of the composition of model name & number

RFI | 04
1 2

1 RFI-Concentric Roller
2 Model No.

RFI

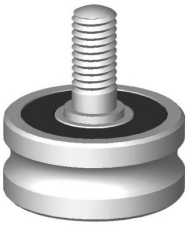

Load and moment of applied roller

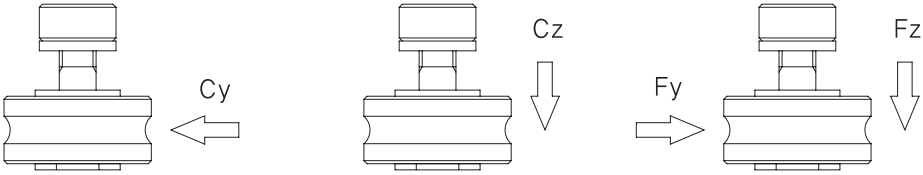

Model No.	Cy (N)	Coy (N)	Cz (N)	Coz (N)	Fymax. (N)	Fzmax. (N)
RFI 04	1150	800	330	190	250	100
RFI 06	3670	2280	1080	550	920	270
RFI 10	8580	5100	2510	1230	2200	630
RFI 12	8580	5100	2510	1230	2200	630

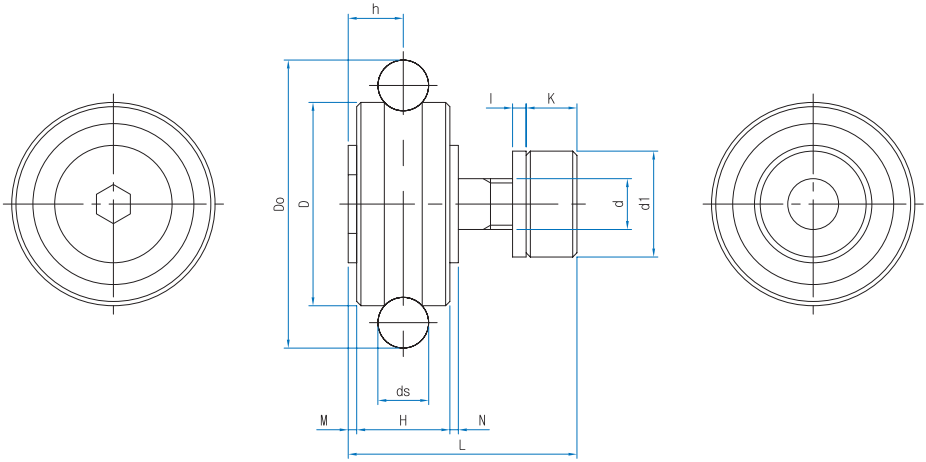

Unit:mm

Model No.	ds	d	D	Do	H	h	d1	M	N	L	I	K	Applied rail
RFI 04	4	4	16	22	7	5	10	1.5	0.5	17	0.5	5.5	TRI 15
RFI 04-1										18			TRI 20
RFI 06	6	6	24	34	11	6.5	14	1	1	21.5	0.5	6	TRI 25
RFI 06-1										25.9			TRI 30
RFI 10	10	10	35	51.3	15.9	8.95	22	1	1.75	33.35	1	9	TRI 35
RFI 10-1										37.35			TRI 45
RFI 12	12	12	42	60.93	19	9.5	22	–	3	43.2	1	12.5	TRI 55

1N ≒ 0.102kgf
1N·m ≒ 0.102kgf • m

S Series Cap Seal

An example of the composition of model name & number

S	04
1	2

1 Model Type
2 Model No.

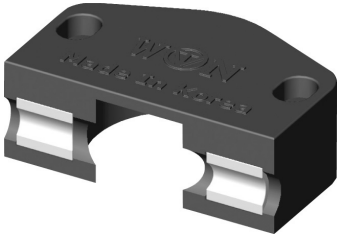

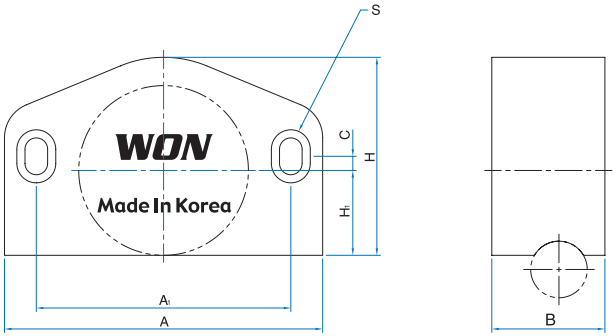

Unit:mm

Model No.	A	A1	B	H	H1	C	S	Applied roller
S 04	38	30	12	20	8	10	3.2×6×3.5	RF, RA 04
S 06	45	36	16	28	12	14		RF, RA 06
S 10	60	50	22	39	17.5	19.5		RF, RA 10

T Series End Seal

An example of the composition of model name & number

T	25
1	2

1 Model Type
2 Model No.

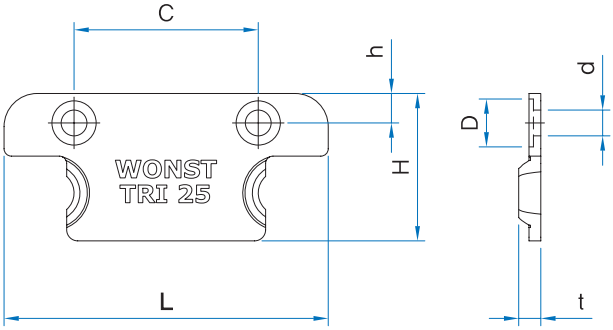

Unit:mm

Model No.	L	H	t	C	h	D	d
T 15	30	15.5	3	20	3	5.5	3.5
T 20	38	16.5	3	22	4	5.5	3.5
T 25	44	20	3	25	4	6	3.5
T 30	56	24.4	3	36	6	8	4.5
T 35	65	31.9	3	40	7	8	4.5
T 45	80	35.4	3	46	9	8	4.5
T 55	94	40.7	3	66	9.5	8	4.5

B Series Bracket

An example of the composition of model name & number

B | 20-1
1 | 2

1 Model Type
2 Model No.

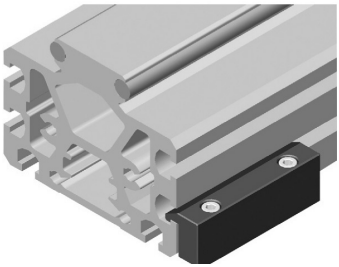

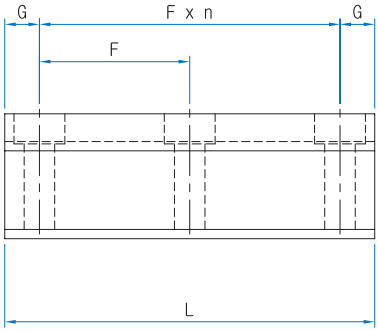

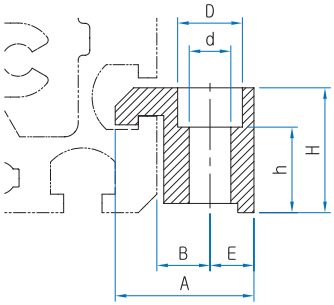

Unit:mm

Model No.	A	B	H	L	d×D	h	E	F×n	G
B 20-1	20	7	23.5	40	6.6×11	17	7.5	25 ×1	7.5
B 20-2				65				25 ×2	
B 25-1	28	10	27	47.5	6.6×11	20.5	9	32.5×1	7.5
B 25-2				80				32.5×2	
B 52-1	30	11.5	27	70	9 ×14	18.5	9.5	55 ×1	7.5
B 52-2				125				55 ×2	

Bracket Assembly Torque

Model No.	M5	M6	M8
Max(N·m)	5.8	9.9	24

1N ≒ 0.102kgf
1N·m ≒ 0.102kgf • m

V Guide
Contents

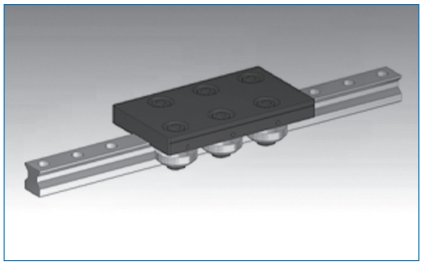

1 Structure and Characteristics

1. Structure of VG Type

WON V Guide consists of guide rails treated with high-frequency heat (HRC58 or above) and roller units. It is a linear motion system capable of high-speed transportation and high precision, with a simple structure that allows for easy installation and maintenance

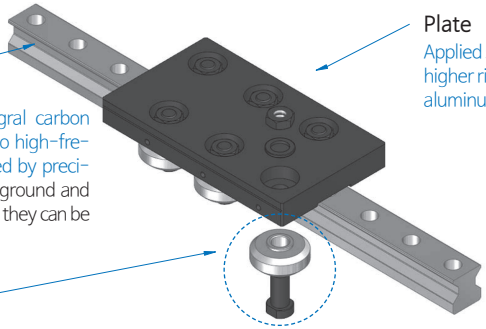

Guide Rail

V-shape surfaces of the integral carbon steel material were subjected to high-frequency heat treatment, followed by precision grinding. When precision-ground and connected on two or more axes, they can be connected without any errors.

Plate

Applied steel material with higher rigidity compared to aluminum.

Roller Unit

The roller unit features double-row angular contact ball bearings, capable of withstanding radial and thrust loads. The size has been increased from Ø6 to Ø9 compared to the existing shaft.

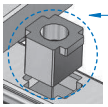

Guide Rail Stopper

V Guide rail is a high-rigidity integral rail and does not require a separate rail stopper.

2. Clearance

The clearance between the rail and the plate is maintained within a maximum of 0.1mm during operation. It can be customized according to the intended usage.

3. Load Capacity in Each Direction

The track roller is made of double-row angular contact ball bearings, which can be loaded in each direction (radial, thrust). The contact area between the rail and the bearing has been increased(from point contact to line contact), resulting in improved durability and lifespan.

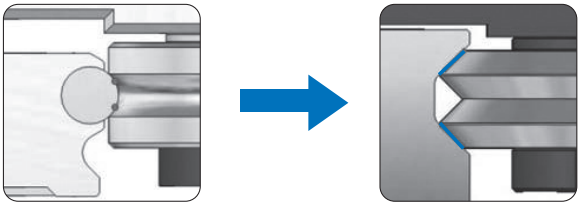

4. Temperature Range of Use

-20℃ ~80℃

5. Structure of VGT Type

It consists of a fixed plate and a tilt type plate designed with angular ball bearings, allowing for subtle tilting. Due to its tilting function, it smoothly absorbs installation misalignment at the rail connections.

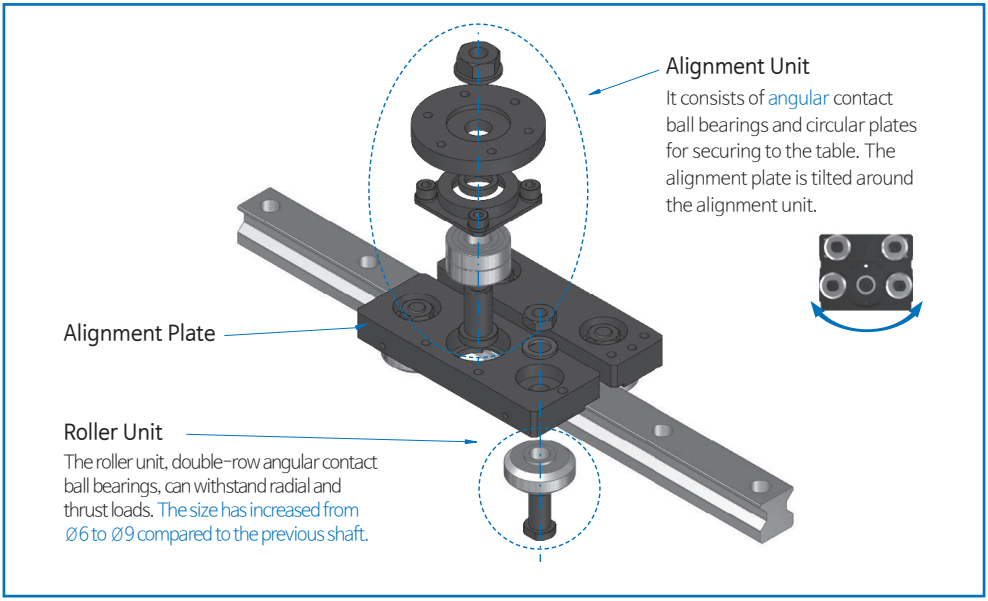

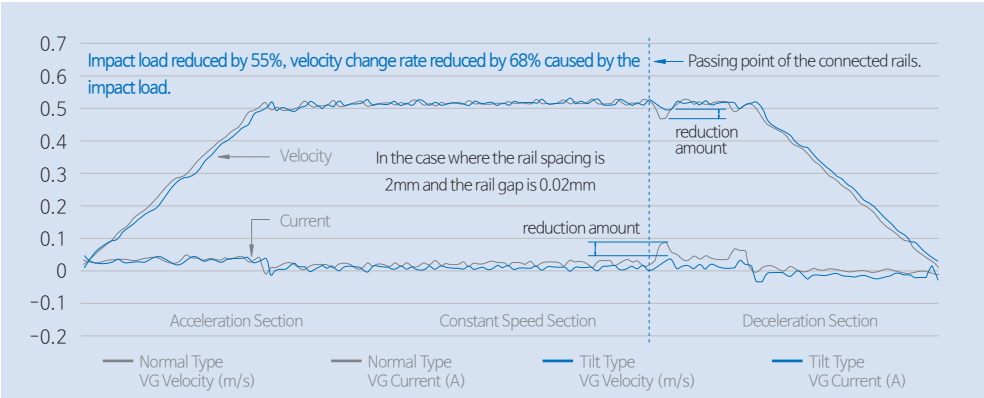

2 Accuracy Specifications

1. Combination Specifications

The accuracy of our V Guide is tested after mounting our rails on the ground reference surface.
※ Recommended torque for rail assembly (M5) – 5.1 N.m.

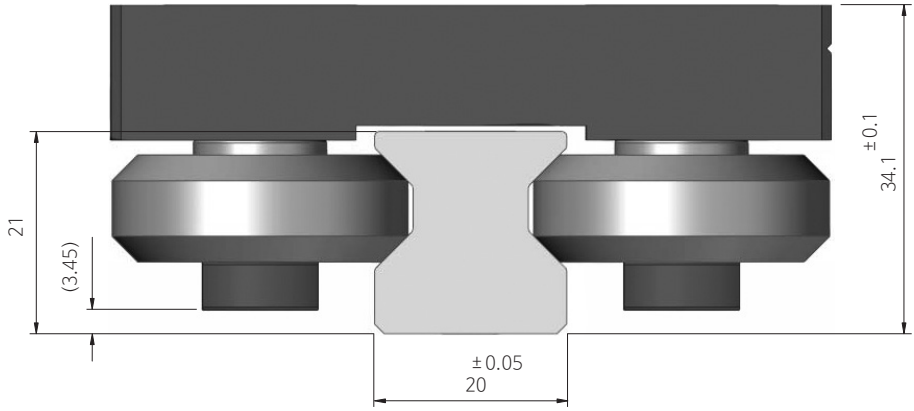

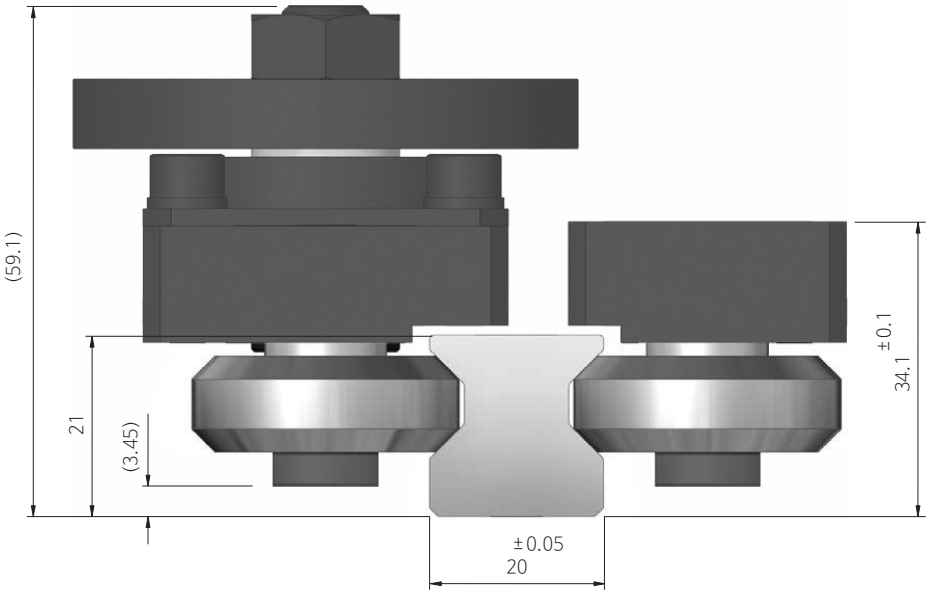

2. Rail Specifications

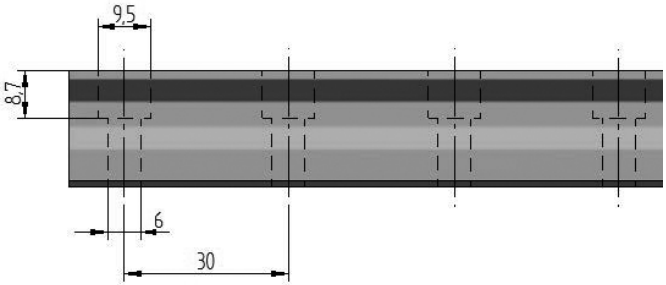

[Range of Rail Production Length Error]
For our general V guide, the manufacturing error per meter is ±1mm.

The length of each individual connecting rail (L) with a ground cross section is as follows: L = L ± 0.3㎜
※ For individual rail lengths exceeding 3 meters, please contact us.

3. Rail Running Accuracy

The measurement value on the measuring device that appears while running the block with preload applied represents the maximum error in the running accuracy of the block relative to the rail.

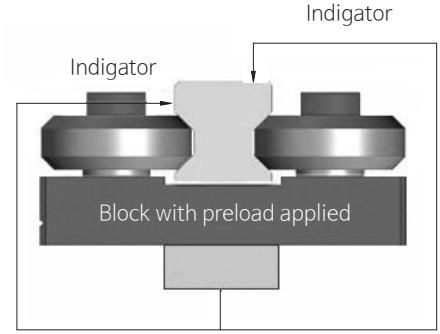

Rail Length (mm)		Running Accuracy (㎛)
Above	Below	
-	500	14
500	1000	20
1000	1600	24
1600	2000	27
2000	2500	30
2500	4000	34

3 Rated Lifespan and Load

1. Rated Lifespan Calculation

Rated lifespan is defined as the total travel distance that each linear system of the same series can travel under the same conditions, without the occurrence of flaking in 90% of the system.

$$L = \left(\frac{C_{yz}}{P \times f_w}\right)^3 \times 10^5 \qquad L_h = \frac{L}{2 \times l_s \times n_1 \times 60}$$

※ The rated lifespan is calculated using the above formula only when the calculated load is less than the maximum permissible load Fyz.

L	: Rated lifespan	(m)	P	: Calculated load in each direction	(N)
L_h	: Service lifespan time	(h)	l_s	: Stroke length	(m)
C_{yz}	: Basic dynamic load rating for each direction	(N)	n_1	: Number of reciprocations per minute	(o.p.m)
f_w	: Load factor				

4) Load Factor (fw)

Generally, the static load acting on linear motion guide blocks can be calculated using a formula. However, during operation, the actual load applied to the block often includes additional loads such as vibration or impact loads. Therefore, especially for high-speed operation, please consider the load factors (fw) provided in the table below. You may divide the basic dynamic load rating of the linear motion guides by the load factor to account for the additional loads.

External Conditions (Vibrations/Impacts)	Service Conditions	Load Factor fw
Low	Smooth running at mild speed; no external vibrations or impacts	1.0 ~ 1.3
Moderate	Low speed; moderate external vibrations or impacts	1.2 ~ 1.5
High	High speed; strong vibrations or impacts	1.5 ~ 2.0
Very High	Very high speed; strong vibrations and impacts during operation	2.0 ~ 4.0

2. Maximum Permissible Load

The maximum permissible load is the maximum load allowed to ensure smooth linear motion, considering the load capacity of the track rollers, rigidity of the block and rail, and accuracy of the track roller guide.

3. Rated Load

[Basic Dynamic Load Rating C]

The load that 90% of linear systems from the same series, when operated under normal conditions, can travel 100 km under the same conditions without experiencing flaking.

[Basic Static Load Rating C0]

The load that can cause permanent deformation of the raceway surface and the rolling elements at a magnitude equal to 0.0001 times of the diameter of the rolling elements.

Part Number	Maximum Permissible Load				Maximum Permissible Moment					
	Fymax (N)	Foymax (N)	Fzmax (N)	Fozmax (N)	Mxmax (N·m)	Moxmax (N·m)	Mymax (N·m)	Moymax (N·m)	Mzmax (N·m)	Mozmax (N·m)
VG20-4R, VGT20	2000	1260	950	600	7.6	4.8	19.5	12.3	41.0	25.8
VG20-6R	2650	1890	1260	900	10.0	7.2	60.5	43.2	127.2	90.7
VG20-8R	3250	2520	1540	1200	12.3	9.6	104.7	81.6	221.0	171.4

Part Number	Basic Dynamic Load Rating				Static Permissible Moment					
	Cy (N)	Coy (N)	Cz (N)	Coz (N)	Mx (N·m)	Mox (N·m)	My (N·m)	Moy (N·m)	Mz (N·m)	Moz (N·m)
VG20-4R, VGT20	7960	5000	3747	2400	29.9	19.1	179.9	115.2	382.1	240.0
VG20-6R	10573	7500	4977	3600	39.7	28.7	238.9	172.8	507.5	360.0
VG20-8R	12931	10000	6088	4800	48.6	38.3	414.0	326.4	879.3	680.0

VG20

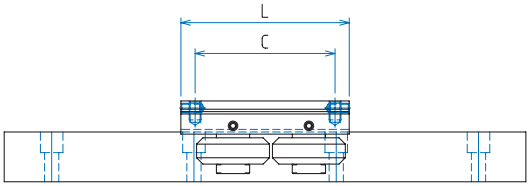

※4R, 6R

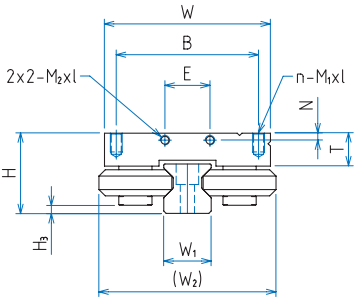

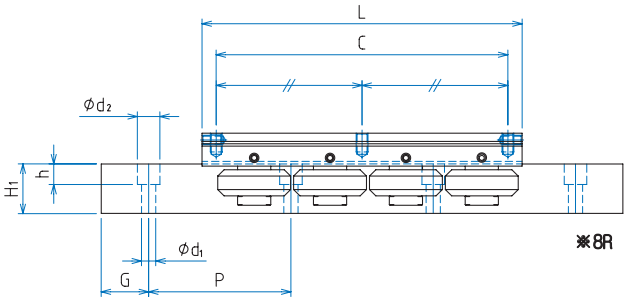

※8R

Unit : mm

Part Number	H (±0.1)	W	L	B	C	n	M X ℓ	E	N	M2 X ℓ	T	H3	W1	H1	G	P	d1xd2xh
VG20-4R	34.1	70	71	60	59	4	5x8	19	3	4x8	14	3.45	20	21	20	60	6x9.5x8.7
VG20-6R			103		91												
VG20-8R			135		123	6											

VGT20

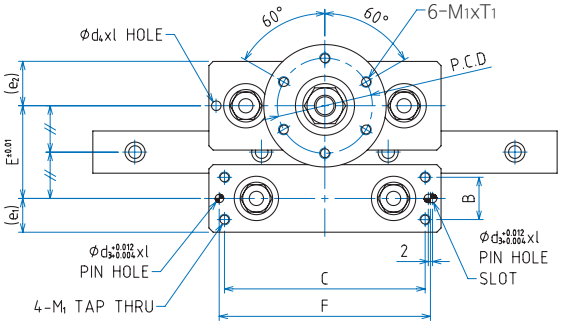

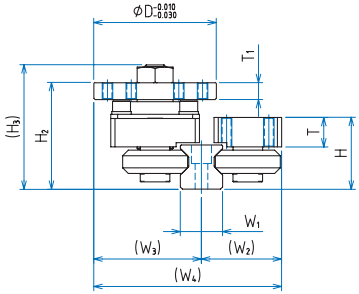

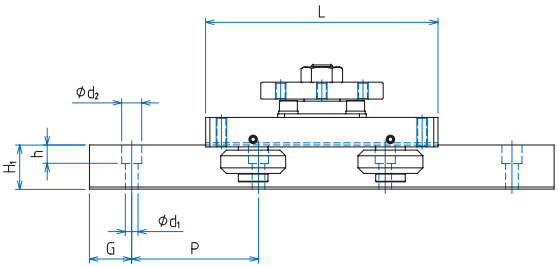

Unit : mm

Part Number	H (±0.1)	(W2)	(W3)	(W4)	L	H2	(H3)	D	T	T1	B	C	E	F	(e1)	(e2)	M1	T1
VGT20	34.1	37.95	50.95	88.9	110	50.6	59.1	58	14	8	20	95	43.9	100	16	21	M5	4

Part Number	d3xl	d4xl	H1	G	P	d1xd2xh
VGT20	4x4.5	4.5x4.5	21	20	60	6x9.5x8.7

5 Mounting Errors of Rails and Assembly of Blocks

1. Rail Mounting Accuracy

If the mounting error of the V Guide is significant, misaligned blocks can lead to a decrease in rigidity.

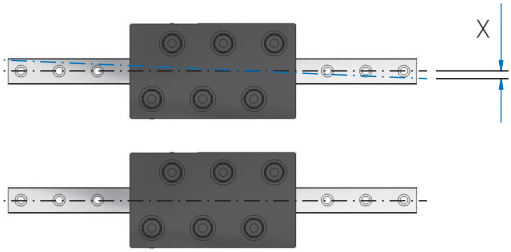

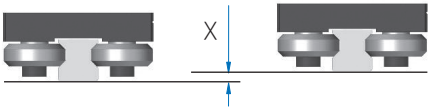

X is less than or equal to 0.025mm.

2. Assembly of Blocks

1) After inserting the roller bearing into the roller bearing bolt, ensure that it is fully fitted under the block, then lightly fasten the washer and nut from above.
2) Fully tighten the side set screws (Recommended torque: 2.5 N.m).
3) Securely fasten the nut by holding the bolt head with a spanner (Recommended torque: 22 N.m).

※ Disassembly can be performed in reverse order.

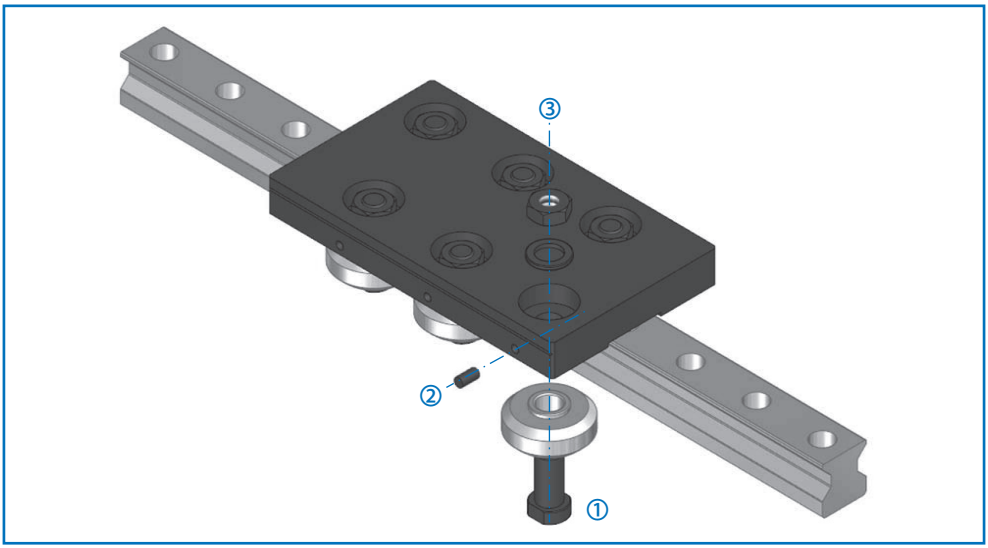

6 Precautions for Use

1. Mounting Position

If it is expected to have sustained or excessive loads withstanding cantilever loads momentarily, please contact our engineers.

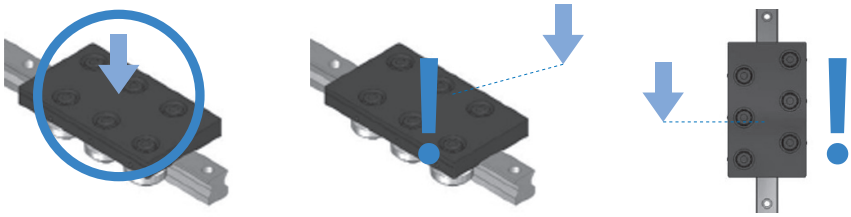

2. Lubrication

WON V Guide for LMS is a system where the guide block repeatedly disengages and engages with the rail through continuous movement and stopping in one direction. Therefore, both the rail raceway surface and the roller contact surface have to be properly lubricated to suppress frictional heat and minimize friction.
Prior to the operation, grease must be thinly applied to the entire rail raceway surface that comes into contact with the rollers. Additionally, a separate lubrication device should be installed to ensure periodic lubrication of the rail surface.
Insufficient lubrication can lead to premature damage to the guide rails or rollers.


4 hours have passed

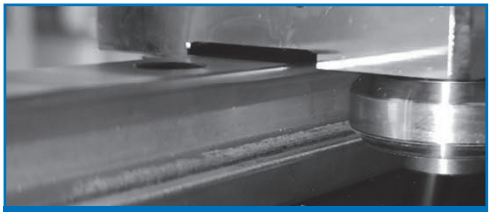
12 hours have passed

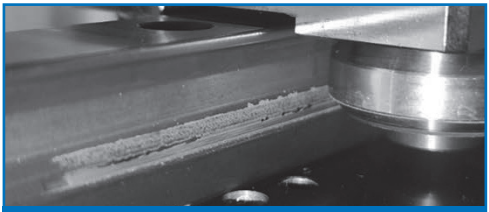
24 hours have passed

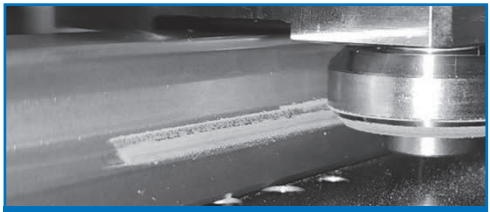
36 hours have passed

※ Unlubricated Test – A radiant item 400mm 1 cycle, 30 cycles per a minute.

WON

LINEAR MOTION SYSTEM

Appendix
Contents

1. Conversion Table from International System of Units (SI)

A table of comparison between SI, CGS system, and engineering

Unit system \ Amount	Length	Mass	Time	Temp.	Acceleration	Force	Stress	Pressure	Energy	Power
SI	m	kg	s	K, ℃		N	Pa	Pa	J	W
CGS System	cm	g	s	℃	Gal	dyn	dyn/cm^2	dyn/cm^2	erg	erg/s
Engineering Unit System		$kgf \cdot S^2/m$		℃	m/s^2	kgf	kgf/m^2	kgf/m^2	kgf · m	kgf · m/s

Conversion Factor in SI Units

Length	SI Units		Other units than SI		Conversion factor in SI units
	Name of unit	Symbol	Name of unit	Symbol	
Angle	Radian	rad	Degree Minute Second	° ' "	$180/\pi$ $10\ 180/\pi$ $648\ 000/\pi$
Length	Meter	m	Micron Angstrom	μ Å	10^6 10^{10}
Area	Square meter	m^2	Are Hectare	a ha	10^{-2} 10^{-4}
Volume	Cubic meter	m^3	Liter Deciliter	l′ L dl′ dL	10^3 10^4
Time	Second	s	Minute Hour Day	min h d	1/60 1/3 600 1/86 400
Vibration, Frequency	Hertz	Hz	Cycle	S^{-1}	1
Revolutions	Revolutions/second	s^2	Revolutions/minute	rpm	60
Speed	Meter/second	m/s	Kilometer/hour Knot	km/h kn	3 600/1000 3 600/1852
Acceleration	Meter/second	m/s	Gal G	Gal G	10^2 1/9.806 65
Mass	Kilogram	kg	Ton	T	10^{-3}
Force	Newton	N	Kilogram weight Ton weight Dyne	kgf tf dyn	1/9.806 65 $1/(9.806\ 65 \times 10^3)$ 10^2
Torque and force moment	Newton meter	N·m	Kilogram weight	kgf·m	1/9.806 65
Stress	Pascal (Newton/square meter)	Pa (N/m)	Kilogram weight/square centimeter Kilogram weight/Millimeter	kgf/cm^2 kgf/mm^2	$1/(9.806\ 65 \times 10^4)$ $1/(9.806\ 65 \times 10^6)$

Factor by which the unit is multiplied	Name and symbol of prefix	
10^{18}	Exa	E
10^{15}	Peta	P
10^{12}	Tera	T
10^{9}	Giga	G
10^{6}	Mega	M
10^{3}	Kilo	k
10^{2}	Hecto	h
10^{1}	Deca	da

Factor by which the unit is multiplied	Name and symbol of prefix	
10^{-1}	Deci	d
10^{-2}	Centi	c
10^{-3}	Milli	m
10^{-6}	Micro	μ
10^{-9}	Nano	n
10^{-12}	Pico	p
10^{-15}	Femto	f
10^{-18}	Ato	a

Conversion Factor in SI Units (cont'd)

Amount	SI units		Other units SI		Conversion factor in SI units
	Name of unit	Symbol	Name of unit	Symbol	
Pressure	Pascal (Newton/square meter)	Pa (N/m^2)	Kilogram weight/square meter Aqua meter Mercury millimeter Torr Bar Atmosphere	kgf/m^2 mH_2O mmHg Torr bar atm	1/9.806 65 1/(9.806 65 X 10^3) 760/(1.013 25 X 10^5) 760/(1.013 25 X 10^5) 10^{-5} 1/(1.013 25 X 10^5)
Energy	Joule (Newton meter)	J (N·m)	Erg Calorie (international) Kilogram meter weight Kilowatt-hour Metric horsepower-hour	erg calrr kgf·m kM·h PS·h	10^7 1/4.186 8 1/9.806 65 1/(3.6 X 10^6) ≈3.776 72 X 10^{-7}
Power	Watt (Newton meter)	W (J/S)	Kilogram weight/second Kilogram/hour Metric horsepower	kgf·m/s kcal/h PS	1/9.806 1/1.163 ≈1/735.498 8
Viscosity, Viscosity Index	Pascal	Pa·s	Poise	P	10
Kinetic viscosity, Kinetic viscosity index	Square meter/second	m^2/s	Stokes Centistokes	St cSt	10^4 10^6
Temperature, Temperature difference	Kelvin, Celsius	K, ℃	Degree	℃	[See Note (1).]
Current, Magnetomotive force	Ampere	A	Ampere	℃	1
Current, electromotive force	Volt	V	(Watt/Ampere)	(W/A)	1
Magnetic intensity	Ampere/meter	A/m	Oersted	Oe	$4\pi/10^3$
Magnetic flux density	Tesla	T	Gausas gamma	Gs γ	10^4 10^9
Electric resistance	Ohm	Ω	Ampere/volt	(V/A)	1

Note (1) In TK, the temperature conversion to θ℃ is θ =T−273.15. In temperature difference, $\Delta T = \Delta\theta$.
ΔT and $\Delta\theta$ represent the temperature difference measured in Kelvin and Celsius scales, respectively.

Remark The name or symbol of a unit in parenthesis is the definition of the unit described above or in the left.

An example of conversion 1N=1/9.809 65kgf

2. N-kgf Conversion Table

[How to read] For example, if you convert 10N, find '10' in the middle column of the 1st block and read the value on its right side in the column kgf. It is found that 10N is converted into 1.0197kgf. If you convert 10kgf, find '10' in the middle column of the same block and read the value on its left side in the column N, which is 98.066N.

1N=0.1019716kgf
1kgf=9.80665 N

N		kgf	N		kgf	N		kgf
9.8066	1	0.1020	333.43	34	3.4670	657.05	67	6.8321
19.613	2	0.2039	343.23	35	3.5690	666.85	68	6.9341
29.420	3	0.3059	353.04	36	3.6710	676.66	69	7.0360
39.227	4	0.4079	362.85	37	3.7729	686.47	70	7.1380
49.033	5	0.5099	372.65	38	3.8749	696.27	71	7.2400
58.840	6	0.6118	382.46	39	3.9769	706.08	72	7.3420
68.647	7	0.7138	392.27	40	4.0789	715.89	73	7.4439
78.453	8	0.8158	402.07	41	4.1808	725.69	74	7.5459
88.260	9	0.9177	411.88	42	4.2828	735.50	75	7.6479
98.066	10	1.0197	421.69	43	4.3848	745.31	76	7.7498
107.87	11	1.1217	431.49	44	4.4868	755.11	77	7.8518
117.68	12	1.2237	441.30	45	4.5887	764.92	78	7.9538
127.49	13	1.3256	451.11	46	4.6907	774.73	79	8.0558
137.29	14	1.4279	460.91	47	4.7927	784.53	80	8.1577
147.10	15	1.5296	470.72	48	4.8946	794.34	81	8.2597
156.91	16	1.6315	480.53	49	4.9966	804.15	82	8.3617
166.71	17	1.7335	490.33	50	5.0986	813.95	83	8.4636
176.52	18	1.8355	500.14	51	5.2006	823.76	84	8.5656
186.33	19	1.9375	509.95	52	5.3025	833.57	85	8.6676
196.13	20	2.0394	519.75	53	5.4045	843.37	86	8.7696
205.94	21	2.1414	529.56	54	5.5065	853.18	87	8.8715
215.75	22	2.2434	539.37	55	5.6084	862.99	88	8.9735
225.55	23	2.3453	549.17	56	5.7104	872.79	89	9.0755
235.36	24	2.4473	558.98	57	5.8124	882.60	90	9.1774
245.17	25	2.5493	568.79	58	5.9144	892.41	91	9.2794
254.97	26	2.6513	578.59	59	6.0163	902.21	92	9.3814
264.78	27	2.7532	588.40	60	6.1183	912.02	93	9.4834
274.59	28	2.8552	598.21	61	6.2203	921.83	94	9.5853
284.39	29	2.9572	608.01	62	6.3222	931.63	95	9.6873
294.20	30	3.0591	617.82	63	6.4242	941.44	96	9.7893
304.01	31	3.1611	627.63	64	6.5262	951.25	97	9.8912
313.81	32	3.2631	637.43	65	6.6282	961.05	98	9.9932
323.62	33	3.3651	647.24	66	6.7301	970.86	99	10.095

3. kg-lb Conversion Table

[How to read] For example, if you convert 10kg, find '10' in the middle column of the 1st block and read the value on its right side in the column lb. It is found that 10kg is converted into 22.046lb. If you convert 10lb, find '10' in the middle column of the same block and read the value on its left side in the column kg, which is 4.536kg.

1kg=2.2046226lb
1lb=0.45359237kg

kg		lb	kg		lb	kg		lb
0.454	1	2.205	15.422	34	74.957	30.391	67	147.71
0.907	2	4.409	15.876	35	77.162	30.844	68	149.91
1.361	3	6.614	16.329	36	79.366	31.298	69	152.12
1.814	4	8.818	16.783	37	81.571	31.751	70	154.32
2.268	5	11.023	17.237	38	83.776	32.205	71	156.53
2.722	6	13.228	17.690	39	85.980	32.659	72	158.73
3.175	7	15.432	18.144	40	88.185	33.112	73	160.94
3.629	8	17.637	18.597	41	90.390	33.566	74	163.14
4.082	9	19.842	19.051	42	92.594	34.019	75	165.35
4.536	10	22.046	19.504	43	94.799	34.473	76	167.55
4.990	11	24.251	19.958	44	97.003	34.927	77	169.76
5.443	12	26.455	20.412	45	99.208	35.380	78	171.96
5.897	13	28.660	20.865	46	101.41	35.834	79	174.17
6.350	14	30.865	21.319	47	103.62	36.287	80	176.37
6.804	15	33.069	21.772	48	105.82	36.741	81	178.57
7.257	16	35.274	22.226	49	108.03	37.195	82	180.78
7.711	17	37.479	22.680	50	110.23	37.648	83	182.98
8.165	18	39.683	23.133	51	112.44	38.102	84	185.19
8.618	19	41.888	23.587	52	114.64	38.555	85	187.39
9.072	20	44.092	24.040	53	116.84	39.009	86	189.60
9.525	21	46.297	24.494	54	119.05	39.463	87	191.80
9.979	22	48.502	24.948	55	121.25	39.916	88	194.01
10.433	23	50.706	25.401	56	123.46	40.370	89	196.21
10.886	24	52.911	25.855	57	125.66	40.823	90	198.42
11.340	25	55.116	26.308	58	127.87	41.277	91	200.62
11.793	26	57.320	26.762	59	130.07	41.730	92	202.83
12.247	27	59.525	27.216	60	132.28	42.184	93	205.03
12.701	28	61.729	27.669	61	134.48	42.638	94	207.23
13.154	29	63.934	28.123	62	136.69	43.091	95	209.44
13.608	30	66.139	28.576	63	138.89	43.545	96	211.64
14.061	31	68.343	29.030	64	141.10	43.998	97	213.85
14.515	32	70.548	29.484	65	143.30	44.452	98	216.05
14.969	33	72.753	29.937	66	145.51	44.906	99	218.26

4. Hardness Conversion Table

Rockwell C Scale Hardness (1 471N)	Vickers Hardness	Brinell Hardness		Rockwell Hardness		Shore Hardness
		Standard Ball	Tungsten Carbide Ball	A Scale Load 588.4N(69kgf) Brale Indenter	B Scale Load 980.7N (100kgf) Diameter 1.588mm (1/16in)	
68	940	–	–	85.6	–	97
67	900	–	–	85.0	–	95
66	865	–	–	84.5	–	92
65	832	–	739	83.9	–	91
64	800	–	722	83.4	–	88
63	772	–	705	82.8	–	87
62	746	–	688	82.3	–	85
61	720	–	670	81.8	–	83
60	697	–	654	81.2	–	81
59	674	–	634	80.7	–	80
58	653	–	615	80.1	–	78
57	633	–	595	79.6	–	76
56	613	–	577	79.0	–	75
55	595	–	560	78.5	–	74
54	577	–	543	78.0	–	72
53	560	–	525	77.4	–	71
52	544	500	512	76.8	–	69
51	528	487	496	76.3	–	68
50	513	475	481	75.9	–	67
49	498	464	469	75.2	–	66
48	484	451	455	74.7	–	64
47	471	442	443	74.1	–	63
46	458	432	432	73.6	–	62
45	446	421	421	73.1	–	60
44	434	409	409	72.5	–	58
43	423	400	400	72.0	–	57
42	412	390	390	71.5	–	56
41	402	381	381	70.9	–	55
40	392	371	371	70.4	–	54
39	382	362	362	69.9	–	52

Rockwell C Scale Hardness (1 471N)	Vickers Hardness	Brinell Hardness		Rockwell Hardness		Shore Hardness
		Standard Ball	Tungsten Carbide Ball	A Scale Load 588.4N(69kgf) Brale Indenter	B Scale Load 980.7N (100kgf) Diameter 1.588mm (1/16in)	
38	372	353	353	69.4	–	51
37	363	344	344	68.9	–	50
36	354	336	336	68.4	(109.0)	49
35	345	327	327	67.9	(108.5)	48
34	336	319	319	67.4	(108.0)	47
33	327	311	311	66.8	(107.5)	46
32	318	301	301	66.3	(107.0)	44
31	310	294	294	65.8	(106.0)	43
30	302	286	286	65.3	(105.5)	42
29	294	279	279	64.7	(104.5)	41
28	286	271	271	64.3	(104.0)	41
27	279	264	264	63.8	(103.0)	40
26	272	258	258	63.3	(102.5)	38
25	266	253	253	62.8	(101.5)	38
24	260	247	247	62.4	(101.0)	37
23	254	243	243	62.0	100.0	36
22	248	237	237	61.5	99.0	35
21	243	231	231	61.0	98.5	35
20	238	226	226	60.5	97.8	34
(18)	230	219	219	–	96.7	33
(16)	222	212	212	–	95.5	32
(14)	213	203	203	–	93.9	31
(12)	204	194	194	–	92.3	29
(10)	196	187	187	–	90.7	28
(8)	188	179	179	–	89.5	27
(6)	180	171	171	–	87.1	26
(4)	173	165	165	–	85.5	25
(2)	166	158	158	–	83.5	24
(0)	160	152	152	–	81.7	24

5. Dimensional Tolerance of Shaft

Diameter (mm)		d6	e6	f6	g5	g6	h5	h6	h7	h8	h9	h10	js5	js6
Above	Below													
3	6	−30 −38	−20 −28	−10 −18	−4 −9	−4 −12	0 −5	0 −8	0 −12	0 −18	0 −30	0 −48	±2.5	±4
6	10	−40 −49	−25 −34	−13 −22	−5 −11	−5 −14	0 −6	0 −9	0 −15	0 −22	0 −36	0 −58	±3	±4.5
10	18	−50 −61	−32 −43	−16 −27	−6 −14	−6 −17	0 −8	0 −11	0 −18	0 −27	0 −43	0 −70	±4	±5.5
18	30	−65 −78	−40 −53	−20 −33	−7 −16	−7 −20	0 −9	0 −13	0 −21	0 −33	0 −52	0 −84	±4.5	±6.5
30	50	−80 −96	−50 −66	−25 −41	−9 −20	−9 −25	0 −11	0 −16	0 −25	0 −39	0 −62	0 −100	±5.5	±8
50	80	−100 −119	−60 −79	−30 −49	−10 −23	−10 −29	0 −13	0 −19	0 −30	0 −46	0 −74	0 −120	±6.5	±9.5
80	120	−120 −142	−72 −94	−36 −58	−12 −27	−12 −34	0 −15	0 −22	0 −35	0 −54	0 −87	0 −140	±7.5	±11
120	180	−145 −170	−85 −110	−43 −68	−14 −32	−14 −39	0 −18	0 −25	0 −40	0 −63	0 −100	0 −160	±9	±12.5
180	250	−170 −199	−100 −129	−50 −79	−15 −35	−15 −44	0 −20	0 −29	0 −46	0 −72	0 −115	0 −185	±10	±14.5
250	315	−190 −222	−110 −142	−56 −88	−17 −40	−17 −49	0 −23	0 −32	0 −52	0 −81	0 −130	0 −210	±11.5	±16
315	400	−210 −246	−125 −161	−62 −98	−18 −43	−18 −54	0 −25	0 −36	0 −57	0 −89	0 −140	0 −230	±12.5	±18
400	500	−230 −270	−135 −175	−68 −108	−20 −47	−20 −60	0 −27	0 −40	0 −63	0 −97	0 −155	0 −250	±13.5	±20
500	630	−260 −304	−145 −189	−76 −120	–	−22 −66	–	0 −44	0 −70	0 −110	0 −175	0 −280	–	±22
630	800	−290 −340	−160 −210	−80 −130	–	−24 −74	–	0 −50	0 −80	0 −125	0 −200	0 −320	–	±25
800	1000	−320 −376	−170 −226	−86 −142	–	−26 −82	–	0 −56	0 −90	0 −140	0 −230	0 −360	–	±28
1000	1250	−350 −416	−195 −261	−98 −164	–	−28 −94	–	0 −66	0 −105	0 −165	0 −260	0 −420	–	±33
1250	1600	−390 −468	−220 −298	−110 −188	–	−30 −108	–	0 −78	0 −125	0 −195	0 −310	0 −500	–	±39
1600	2000	−430 −522	−240 −332	−120 −212	–	−32 −124	–	0 −92	0 −150	0 −230	0 −370	0 −600	–	±46

j5	j6	j7	k5	k6	k7	m5	m6	n6	p6	r6	r7	Diameter (mm)	
												Above	Below
+3 −2	+6 −2	+8 −4	+6 +1	+9 +1	+13 +1	+9 +4	+12 +4	+16 +8	+20 +12	+23 +15	+27 +15	3	6
+4 −2	+7 −2	+10 −5	+7 +1	+10 +1	+16 +1	+12 +6	+15 +6	+19 +10	+24 +15	+28 +19	+34 +19	6	10
+5 −3	+8 −3	+12 −6	+9 +1	+12 +1	+19 +1	+15 +7	+18 +7	+23 +12	+29 +18	+34 +23	+41 +23	10	18
+5 −4	+9 −4	+13 −8	+11 +2	+15 +2	+23 +2	+17 +8	+21 +8	+28 +15	+35 +22	+41 +28	+49 +28	18	30
+6 −5	+11 −5	+15 −10	+13 +2	+18 +2	+27 +2	+20 +9	+25 +9	+33 +17	+42 +26	+50 +34	+59 +34	30	50
+6 −7	+12 −7	+18 −12	+15 + 2	+21 + 2	+32 + 2	+24 + 11	+30 + 11	+39 +20	+51 +32	+60 +41	+71 +41	50	65
										+62 +43	+73 +43	65	80
+6 −9	+13 −9	+20 −15	+18 + 3	+25 + 3	+38 + 3	+28 +13	+35 +13	+45 +23	+59 +37	+73 +51	+86 +51	80	100
										+76 +54	+89 +54	100	120
+7 −11	+14 −11	+22 −18	+21 + 3	+28 + 3	+43 + 3	+33 +15	+40 +15	+52 +27	+68 +43	+88 +63	+103 +63	120	140
										+90 +65	+105 +65	140	160
										+93 +68	+108 +68	160	180
+7 −13	+16 −13	+25 −21	+24 + 4	+33 + 4	+50 + 4	+37 +17	+46 + 17	+60 +31	+79 +50	+106 +77	+123 +77	180	200
										+109 +80	+126 +80	200	225
										+113 +84	+130 +84	225	250
+7 −16	±16	±26	+27 + 4	+36 + 4	+56 + 4	+43 +20	+52 +20	+66 +34	+88 +56	+126 +94	+146 +94	250	280
										+130 +98	+150 +98	280	315
+7 −18	±18	+29 −28	+29 + 4	+40 + 4	+61 + 4	+46 +21	+57 +21	+73 +37	+98 +62	+144 +108	+165 +108	315	355
										+150 +114	+171 +114	355	400
+7 −20	±20	+31 −32	+32 + 5	+45 + 5	+68 + 5	+50 +23	+63 +23	+80 +40	+108 +68	+166 +126	+189 +126	400	450
										+172 +132	+195 +132	450	500
–	–	–	–	+44 0	+70 0	–	+70 +26	+88 +44	+122 +78	+194 +150	+220 +150	500	560
										+199 +155	+225 +155	560	630
–	–	–	–	+50 0	+80 0	–	+80 +30	+100 + 50	+138 +88	+225 +175	+255 +175	630	710
										+235 +185	+265 +185	710	800
–	–	–	–	+56 0	+90 0	–	+90 +34	+112 +56	+156 +100	+266 +210	+300 +210	800	900
										+276 +220	+310 +220	900	1000
–	–	–	–	+66 0	+105 0	–	+106 + 40	+132 +66	+186 +120	+316 +250	+355 +250	1000	1120
										+326 +260	+365 +260	1120	1250
–	–	–	–	+78 0	+125 0	–	+126 + 48	+156 +78	+218 +140	+378 +300	+425 +300	1250	1400
										+408 +330	+455 +330	1400	1600
–	–	–	–	+92 0	+150 0	–	+150 + 58	+184 +92	+262 +170	+462 +370	+520 +370	1600	1800
										+492 +400	+550 +400	1800	2000

6. Dimensional Tolerance of Housing Hole

Diameter (mm)		E6	F6	F7	G6	G7	H6	H7	H8	J6	J7	JS6	JS7
Above	Below												
10	18	+43 +32	+27 +16	+34 +16	+17 +6	+24 +6	+11 0	+18 0	+27 0	+6 −5	+10 −8	±5.5	±9
18	30	+53 +40	+33 +20	+41 +20	+20 +7	+28 +7	+13 0	+21 0	+33 0	+8 −5	+12 −9	±6.5	±10.5
30	50	+66 +50	+41 +25	+50 +25	+25 +9	+34 +9	+16 0	+25 0	+39 0	+10 −6	+14 −11	±8	±12.5
50	80	+79 +60	+49 +30	+60 +30	+29 +10	+40 +10	+19 0	+30 0	+46 0	+13 −6	+18 −12	±9.5	±15
80	120	+94 +72	+58 +36	+71 +36	+34 +12	+47 +12	+22 0	+35 0	+54 0	+16 −6	+22 −13	±11	±17.5
120	180	+110 +85	+68 +43	+83 +43	+39 +14	+54 +14	+25 0	+40 0	+63 0	+18 −7	+26 −14	±12.5	±20
180	250	+129 +100	+79 +50	+96 +50	+44 +15	+61 +15	+29 0	+46 0	+72 0	+22 −7	+30 −16	±14.5	±23
250	315	+142 +110	+88 +56	+108 +56	+49 +17	+69 +17	+32 0	+52 0	+81 0	+25 −7	+36 −16	±16	±26
315	400	+161 +125	+98 +62	+119 +62	+54 +18	+75 +18	+36 0	+57 0	+89 0	+29 −7	+39 −18	±18	±28.5
400	500	+175 +135	+108 +68	+131 +68	+60 +20	+83 +20	+40 0	+63 0	+97 0	+33 −7	+43 −20	±20	±31.5
500	630	+189 +145	+120 +76	+146 +76	+66 +22	+92 +22	+44 0	+70 0	+110 0	–	–	±22	±35
630	800	+210 +160	+130 +80	+160 +80	+74 +24	+104 +24	+50 0	+80 0	+125 0	–	–	±25	±40
800	1000	+226 +170	+142 +86	+176 +86	+82 +26	+116 +26	+56 0	+90 0	+140 0	–	–	±28	±45
1000	1250	+261 +195	+164 +98	+203 +98	+94 +28	+133 +28	+66 0	+105 0	+165 0	–	–	±33	±52.5
1250	1600	+298 +220	+188 +110	+235 +110	+108 +30	+155 +30	+78 0	+125 0	+195 0	–	–	±39	±62.5
1600	2000	+332 +240	+212 +120	+270 +120	+124 +32	+182 +32	+92 0	+150 0	+230 0	–	–	±46	±75
2000	2500	+370 +260	+240 +130	+305 +130	+144 +34	+209 +34	+110 0	+175 0	+280 0	–	–	±55	±87.5

K5	K6	K7	M5	M6	M7	N5	N6	N7	P6	P7	Diameter (mm)	
											Above	Below
+2 −6	+2 −9	+6 −12	−4 −12	−4 −15	0 −18	−9 −17	−9 −20	−5 −23	−15 −26	−11 −29	10	18
+1 −8	+2 −11	+6 −15	−5 −14	−4 −17	0 −21	−12 −21	−11 −24	−7 −28	−18 −31	−14 −35	18	30
+2 −9	+3 −13	+7 −18	−5 −16	−4 −20	0 −25	−13 −24	−12 −28	−8 −33	−21 −37	−17 −42	30	50
+3 −10	+4 −15	+9 −21	−6 −19	−5 −24	0 −30	−15 −28	−14 −33	−9 −39	−26 −45	−21 −51	50	80
+2 −13	+4 −18	+10 −25	−8 −23	−6 −28	0 −35	−18 −33	−16 −38	−10 −45	−30 −52	−24 −59	80	120
+3 −15	+4 −21	+12 −28	−9 −27	−8 −33	0 −40	−21 −39	−20 −45	−12 −52	−36 −61	−28 −68	120	180
+2 −18	+5 −24	+13 −33	−11 −31	−8 −37	0 −46	−25 −45	−22 −51	−14 −60	−41 −70	−33 −79	180	250
+3 −20	+5 −27	+16 −36	−13 −36	−9 −41	0 −52	−27 −50	−25 −57	−14 −66	−47 −79	−36 −88	250	315
+3 −22	+7 −29	+17 −40	−14 −39	−10 −46	0 −57	−30 −55	−26 −62	−16 −73	−51 −87	−41 −98	315	400
+2 −25	+8 −32	+18 −45	−16 −43	−10 −50	0 −63	−33 −60	−27 −67	−17 −80	−55 −95	−45 −108	400	500
–	0 −44	0 −70	–	−26 −70	−26 −96	–	−44 −88	−44 −114	−78 −122	−78 −148	500	630
–	0 −50	0 −80	–	−30 −80	−30 −110	–	−50 −100	−50 −130	−88 −138	−88 −168	630	800
–	0 −56	0 −90	–	−34 −90	−34 −124	–	−56 −112	−56 −146	−100 −156	−100 −190	800	1000
–	0 −66	0 −105	–	−40 −106	−40 −145	–	−66 −132	−66 −171	−120 −186	−120 −225	1000	1250
–	0 −78	0 −125	–	−48 −126	−48 −173	–	−78 −156	−78 −203	−140 −218	−140 −265	1250	1600
–	0 −92	0 −150	–	−58 −150	−58 −208	–	−92 −184	−92 −242	−170 −262	−170 −320	1600	2000
–	0 −110	0 −175	–	−68 −178	−68 −243	–	−110 −220	−110 −285	−195 −305	−195 −370	2000	2500

7. Usage Example of Linear Motion Guide

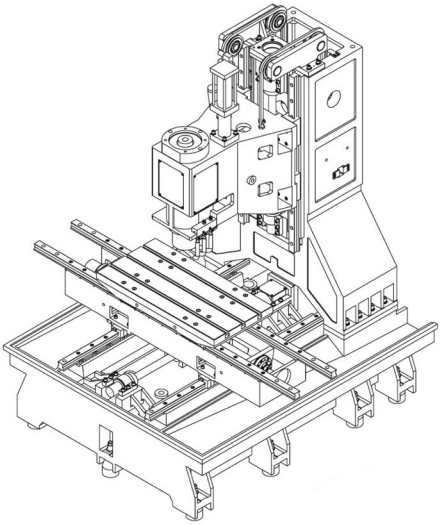

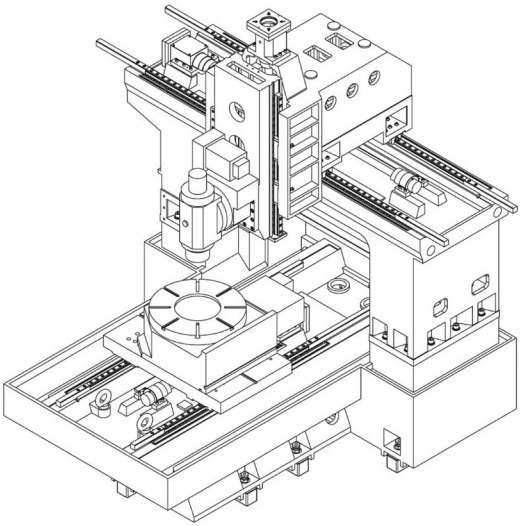

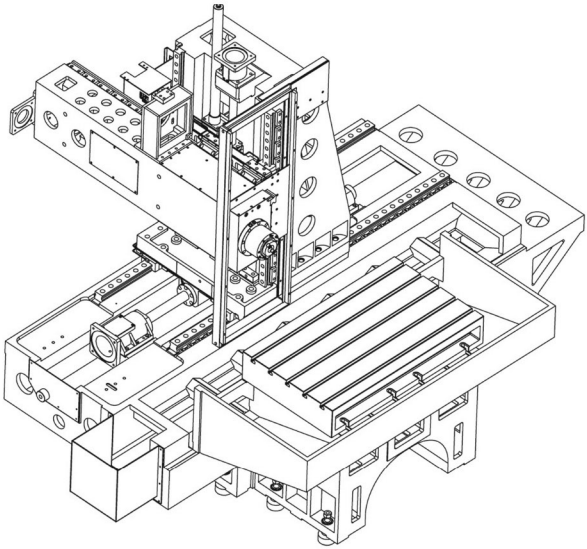

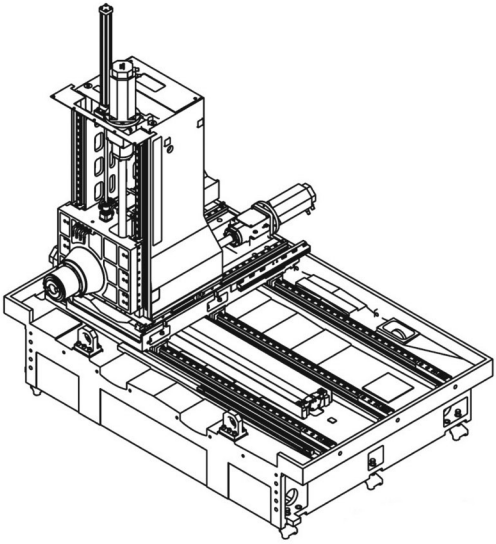

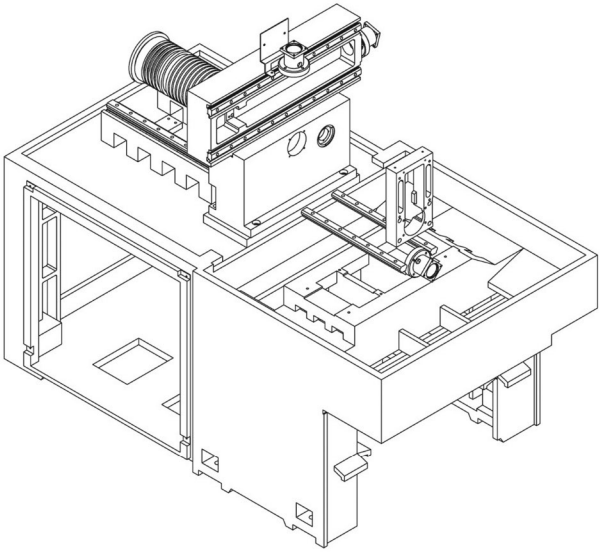

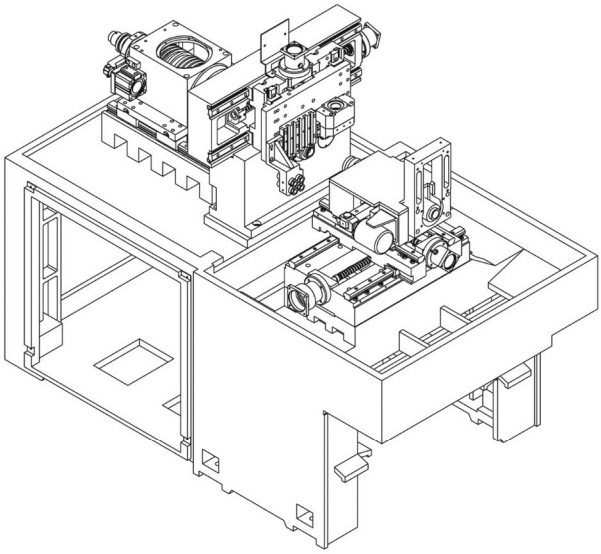

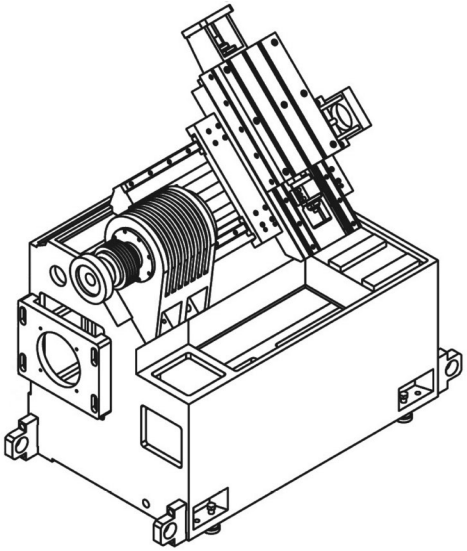

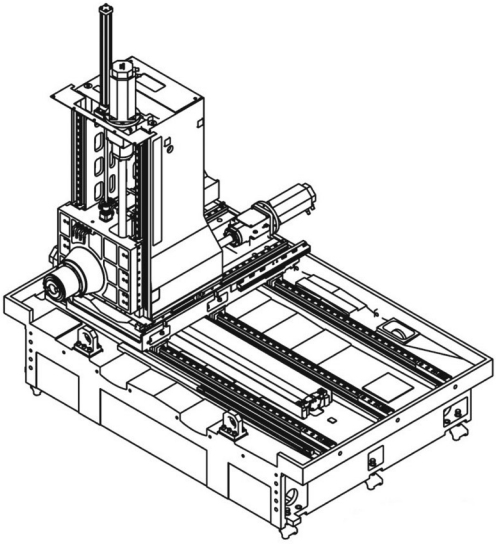

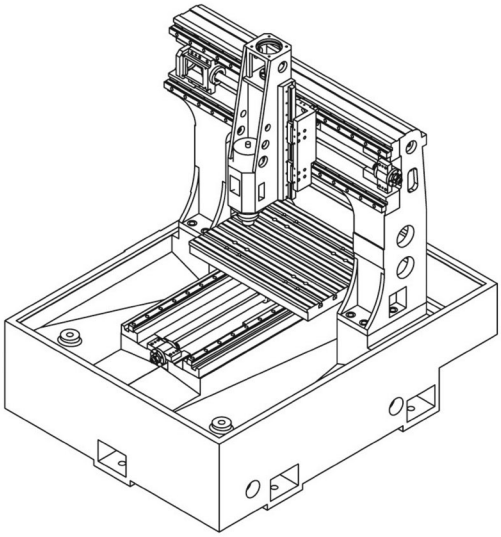

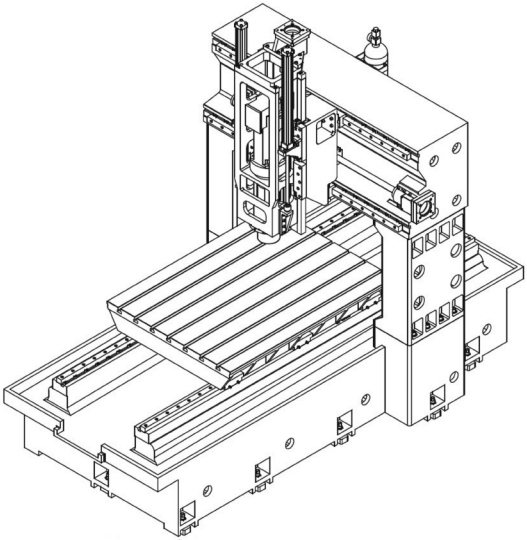

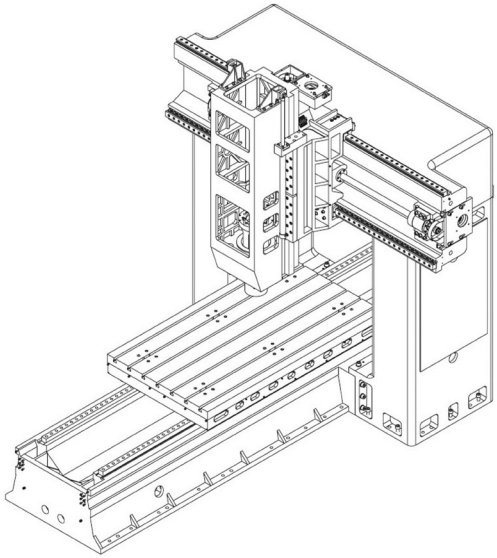

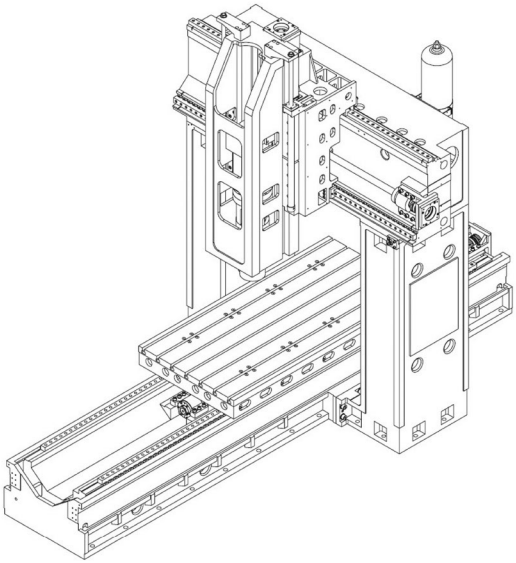

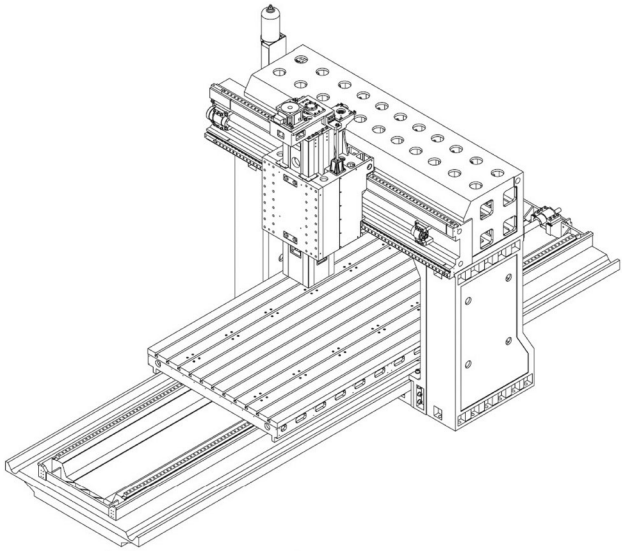

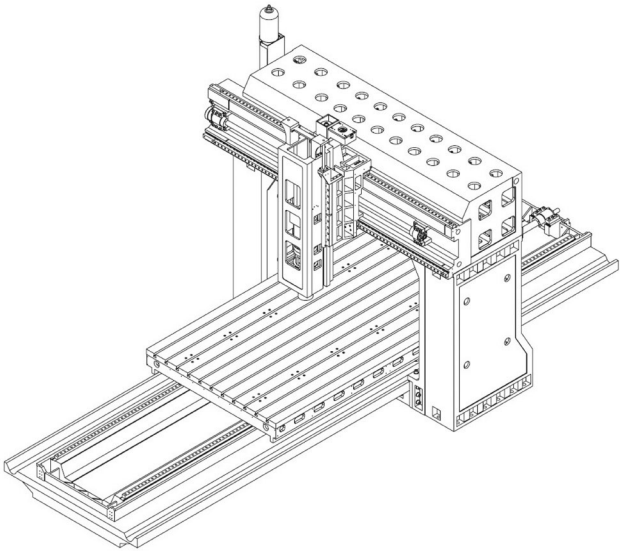

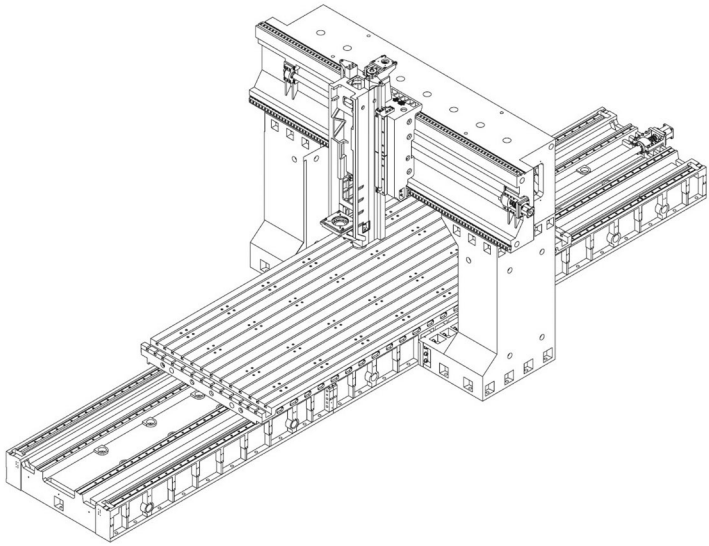

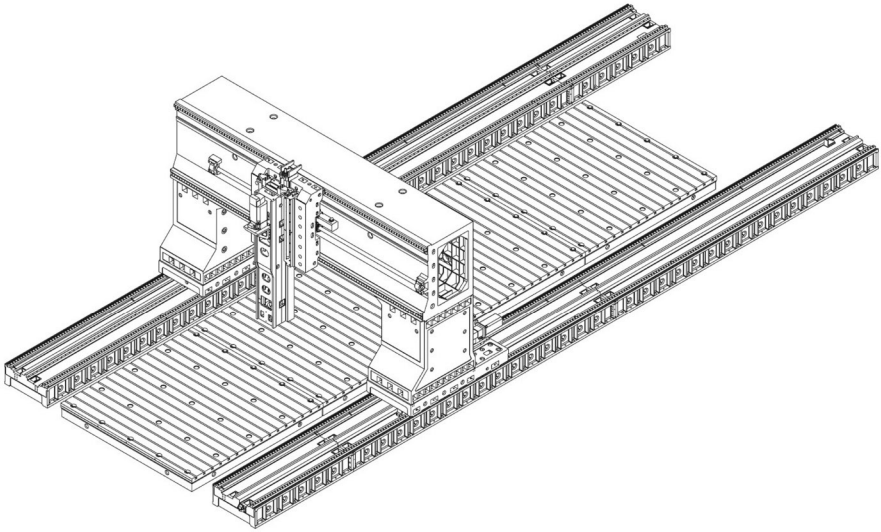

8. Usage Example of Crossed Roller Bearing

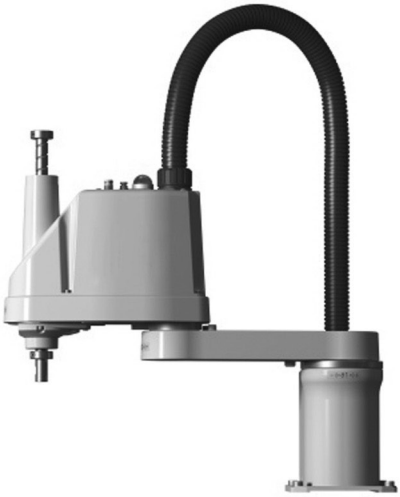

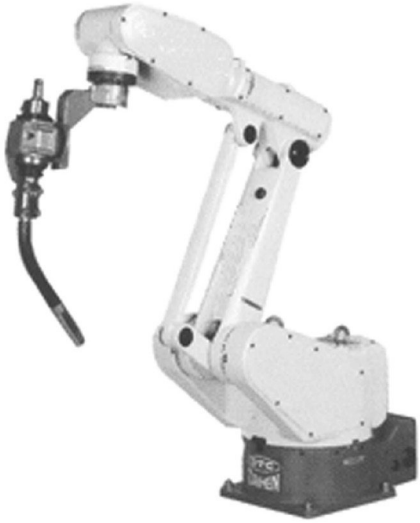

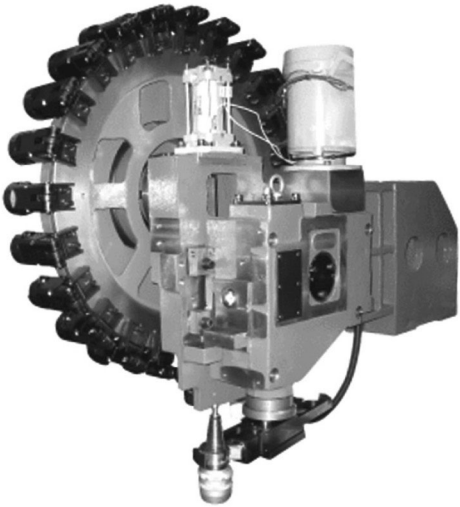

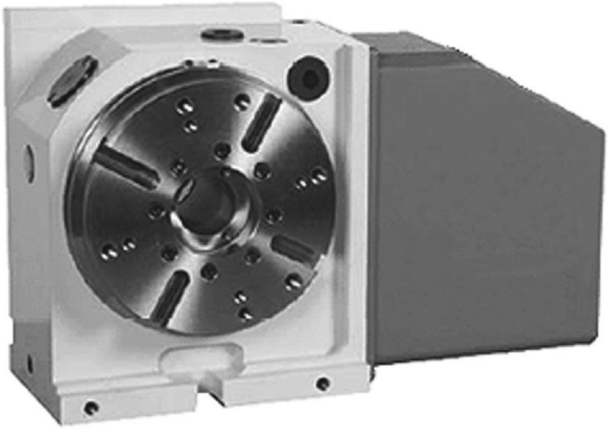

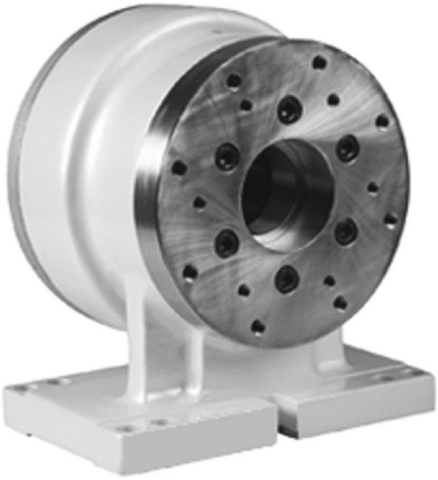

WON

LINEAR MOTION SYSTEM

MEMO

MEMO

MEMO

MEMO

MEMO

WON

LINEAR MOTION SYSTEM

LINEAR MOTION SYSTEM

The first edition published in April 2014

The 12th revised edition printed first in June 2022
The 12th revised edition published first in July 2022

WON
LINEAR MOTION SYSTEM

W202303-01